ICOM

SERVICE MANUAL

IC-275A/E/H

144 MHz ALL MODE TRANSCEIVER

ICOM INCORPORATED

Downloaded from www.Manualslib.com manuals search engine

SCOPE OF THE SERVICE MANUAL

This service manual covers all service information related to the theoretical, physical, mechanical and electrical characteristics of the **IC-275A/E/H** 144 MHz ALL MODE TRANSCEIVER.

ASSISTANCE

If you require assistance or further information regarding the operation, capability and servicing of the **IC-275A/E/H**, contact your nearest authorized ICOM Dealer or ICOM Service Center. Addresses are provided on the inside back cover for your convenience.

Eight separate versions of the **IC-275A/E/H** have been designed. This service manual covers every version. When using the manual each model can be referred to by the following assigned version numbers:

IC-275A/E Model

Version Number	Area
#06E	EUROPE
#08A	U.S.A.
#10A	AUSTRALIA
#12E	SWEDEN

IC-275H Model

Version Number	Area
#02H	EUROPE
#03H	U.S.A.
#04H	AUSTRALIA
#05H	SWEDEN

ORDERING REPLACEMENT PARTS

For faster, more efficient service include the following points when ordering parts or requesting information from your ICOM Service Center.

1. Equipment model and serial number
2. Schematic part indentifier or service manual page number
3. Unit name and printed circuit board number (e.g., PA UNIT/B1380B)
4. Component part number and name (e.g., 2SB562 Transistor)
5. Quantity required (e.g., 10 pcs)

Downloaded from www.Manualslib.com manuals search engine

TABLE OF CONTENTS

Downloaded from www.Manualslib.com manuals search engine

The SCHEMATIC DIAGRAM is attached at the end of this service manual.

Downloaded from www.Manualslib.com manuals search engine

SECTION 1 SPECIFICATIONS

GENERAL

• Frequency coverage	:	U.S.A. Versions (#08A, #03H) ∗140.1000~150.0000MHz
		Europe Versions (#06E, #02H) 144.0000~146.0000MHz
		Australia Versions (#10A, #04H) 144.0000~148.0000MHz
		Sweden Versions (#12E, #05H) 144.0000~146.0000MHz
		∗Specifications guaranteed from 143.8000 to 148.2000MHz
• Number of memory channels	:	99 channels plus P1, P2 and CALL CHANNEL
• Antenna impedance	:	50Ω unbalanced
• Frequency stability	:	±5ppm (−10°C~+60°C)
• Power supply requirement	:	#08A version 117V AC±10%
		#06E, #10A and #12E versions 240V AC±10%
		All versions 13.8V DC±15%
• Current drain (at 13.8V DC)	:	IC-275A/E
		Transmitting HIGH (25W) Approx. 6A
		LOW (2.5W) Approx. 3A
		Receiving At maximum audio output Approx. 1A
		Squelched Approx. 0.9A
		IC-275H
		Transmitting HIGH (100W) Approx. 20.0A
		LOW (10W) Approx. 6.0A
		Receiving At maximum audio output Approx. 1.0A
		Squelched Approx. 0.9A
• Dimensions	:	IC-275A/E
		241(244)mm(W)×95(108)mm(H)×239(295)mm(D)
		IC-275H
		241(244)mm(W)×95(108)mm(H)×239(277)mm(D)
		Bracketed values include projections.
• Weight	:	IC-275A/E 6.2kg
		IC-275H 6.0kg
• Usable temperature range	:	−10°C~+60°C

TRANSMITTER

• Emission modes	:	FM (F3), SSB (A3J), CW (A1)
• RF output power	:	IC-275A/E
		2.5~25W continuously adjustable
		IC-275H
		10~100W continuously adjustable
• Modulation system	:	FM Variable reactance frequency modulation
		SSB Balanced modulation
• Maximum frequency deviation	:	±5kHz (FM mode)
• Spurious output	:	More than 60dB below peak output power
• Carrier suppression	:	More than 40dB below peak output power
• Unwanted sideband	:	More than 40dB down with 1000Hz AF input
• Microphone impedance	:	600Ω

Downloaded from www.Manualslib.com manuals search engine

■ RECEIVER

• Receive system	:	Double conversion superheterodyne		
• Receive modes	:	FM (F3), SSB (A3J), CW (A1)		
• Intermediate frequencies	:	1st	10.75 MHz (FM, SSB)	10.7491 MHz (CW)
		2nd	455 kHz (All modes)	
• Sensitivity (with a 50Ω load)	:	FM	Less than 0.18μV for 12dB SINAD	
			Less than 0.25μV for 20dB NQL	
		SSB, CW	Less than 0.1μV for 10dB S/N	
• Squelch sensitivity	:	FM	Less than 0.1μV	
		SSB	Less than 0.56μV	
• Selectivity	:	FM	15.0 kHz/6dB	30.0 kHz/60dB
		SSB, CW	2.2 kHz/6dB	4.2 kHz/60dB
• Spurious response rejection	:	More than 70dB		
• Audio output impedance	:	8Ω		
• Audio output power	:	More than 2W at 10% distortion with an 8Ω load		
• RIT variable range	:	±9.99 kHz		

Downloaded from www.Manualslib.com manuals search engine

SECTION 2 OUTSIDE AND INSIDE VIEWS

2-1 OUTSIDE VIEWS

2-1-1 FRONT PANEL

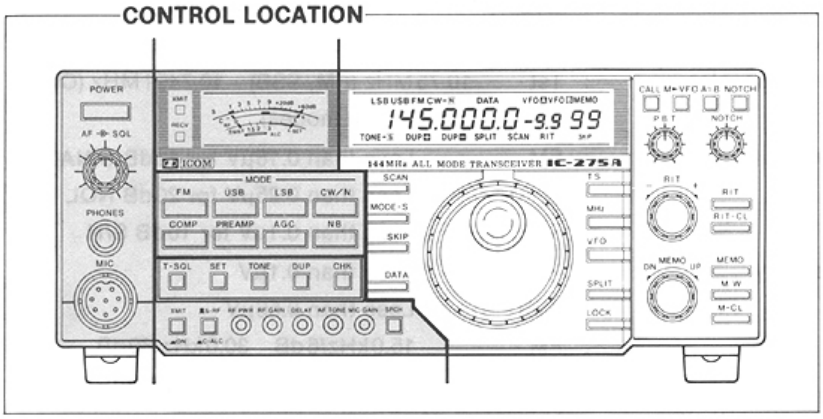

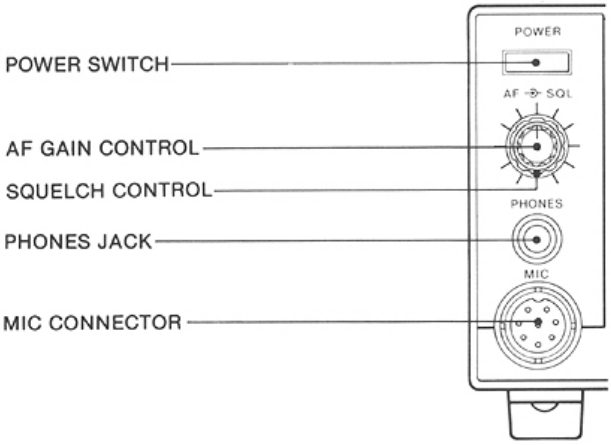

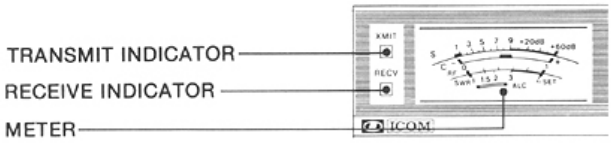

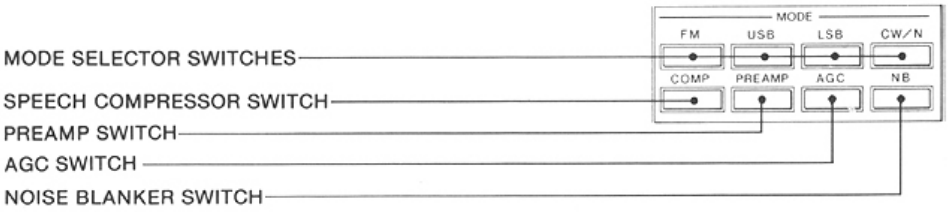

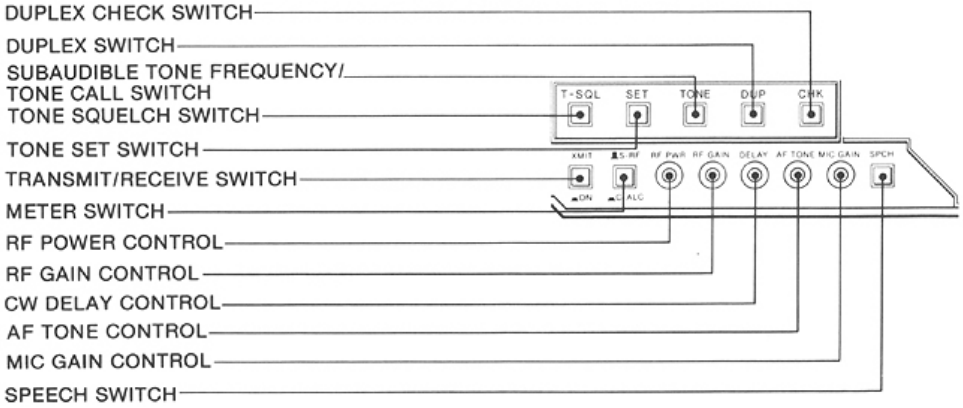

Downloaded from www.Manualslib.com manuals search engine

• FRONT PANEL (CONTROL LOCATION)

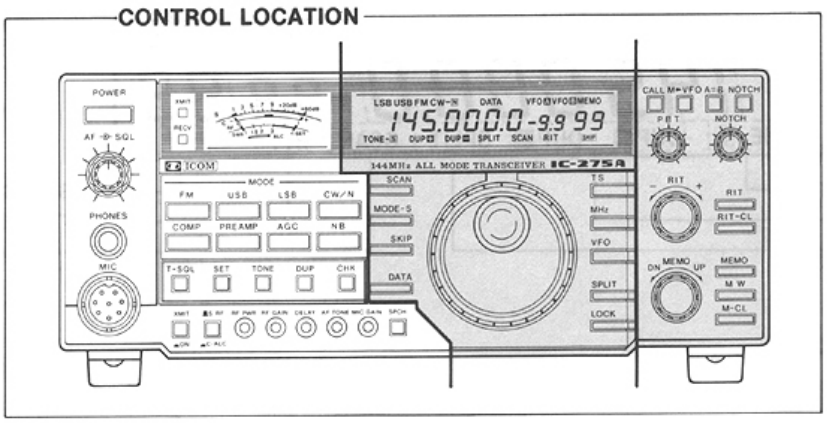

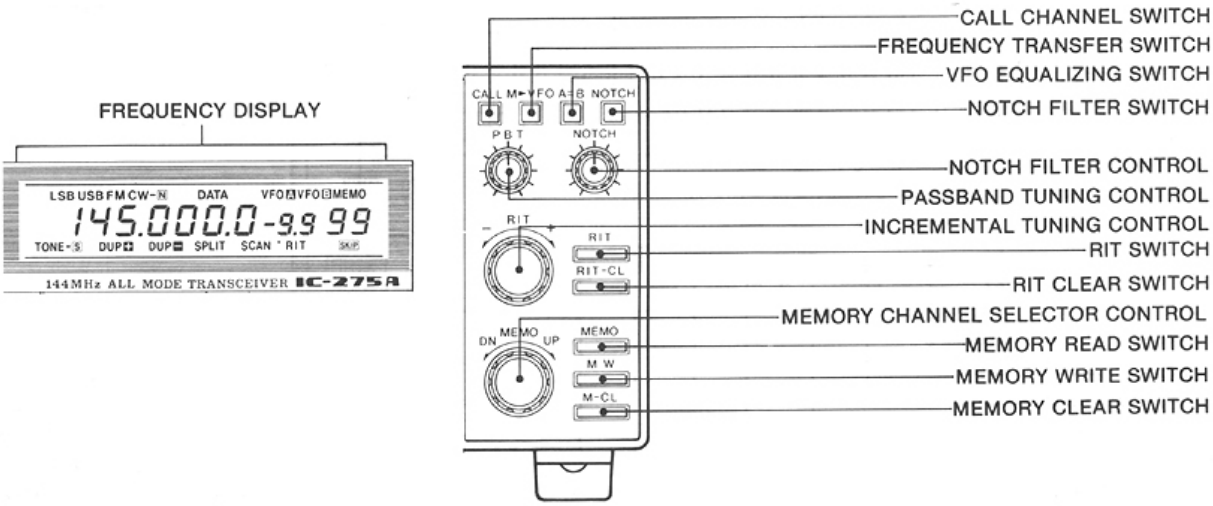

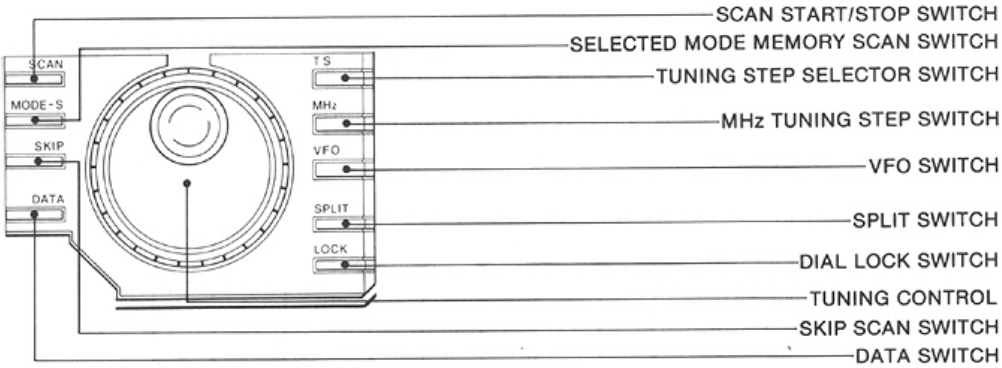

Downloaded from www.Manualslib.com manuals search engine

2-1-2 FREQUENCY DISPLAY

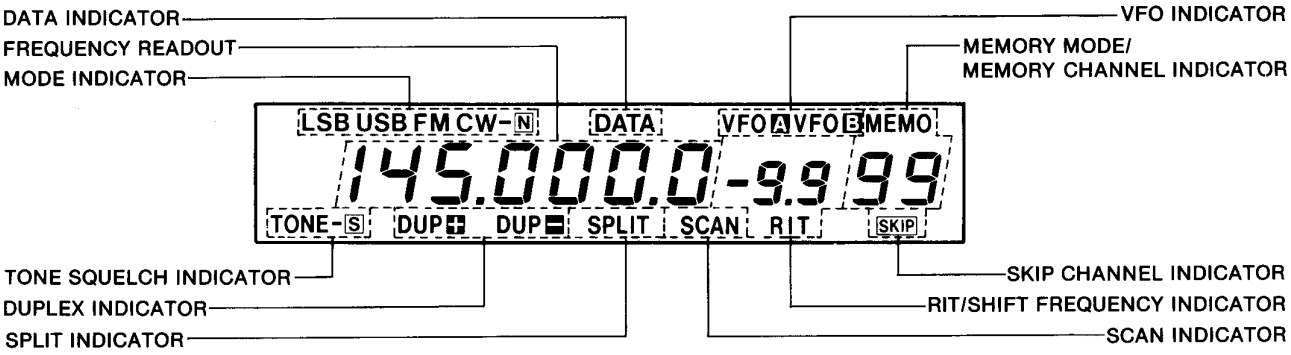

2-1-3 REAR PANEL

• IC-275A/E

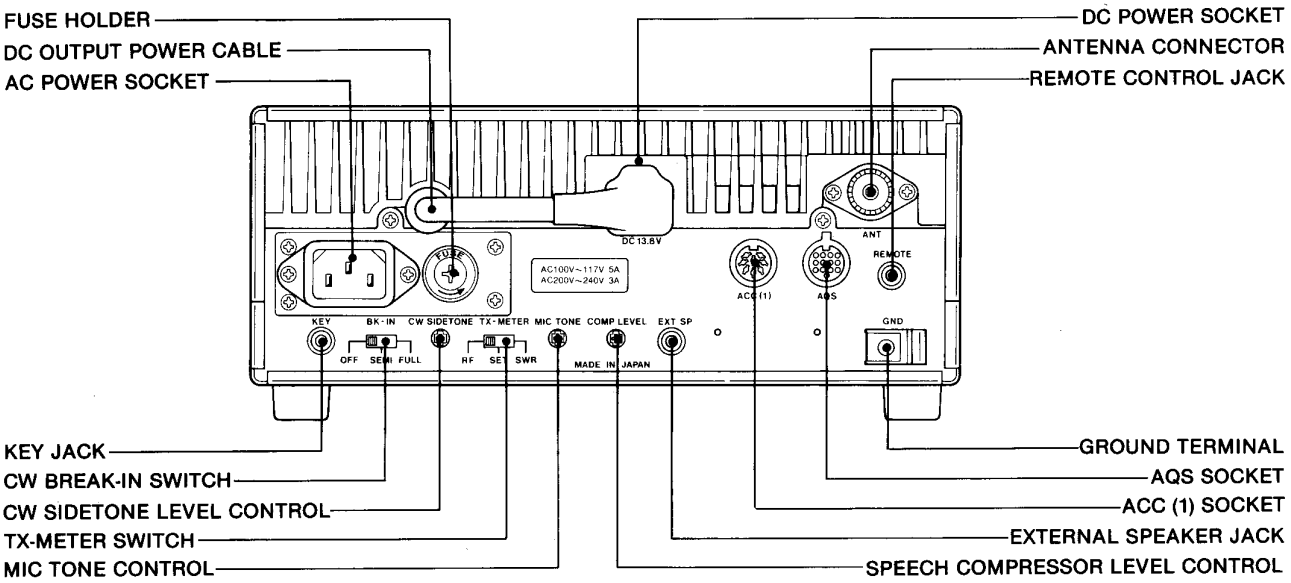

• IC-275H

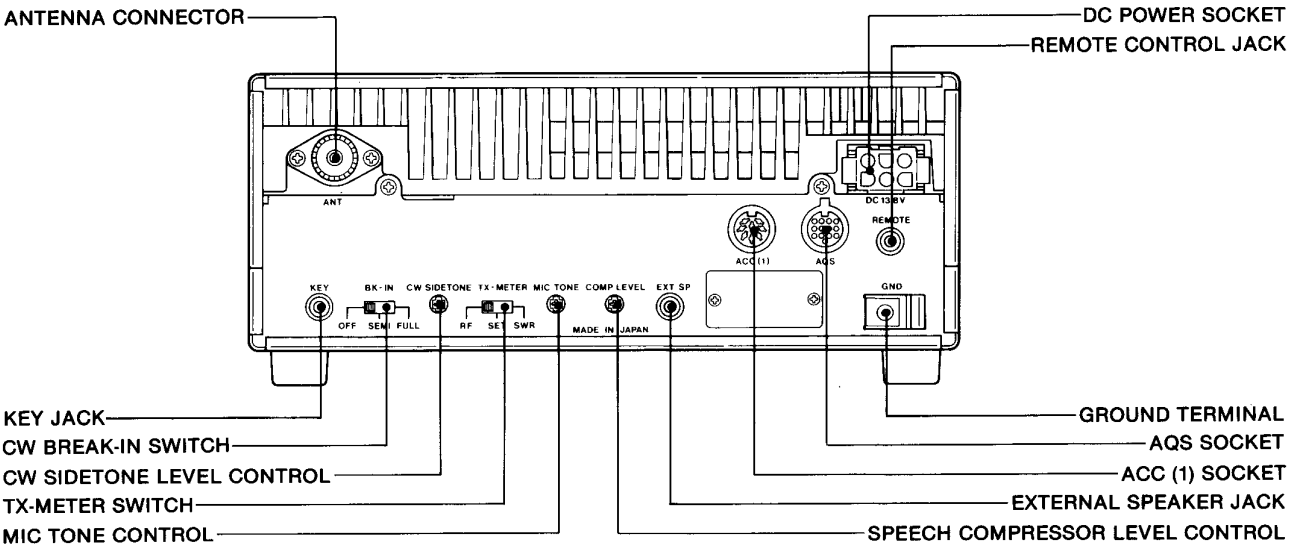

Downloaded from www.Manualslib.com manuals search engine

2-2 INSIDE VIEWS

2-2-1 PLL AND LOGIC UNITS

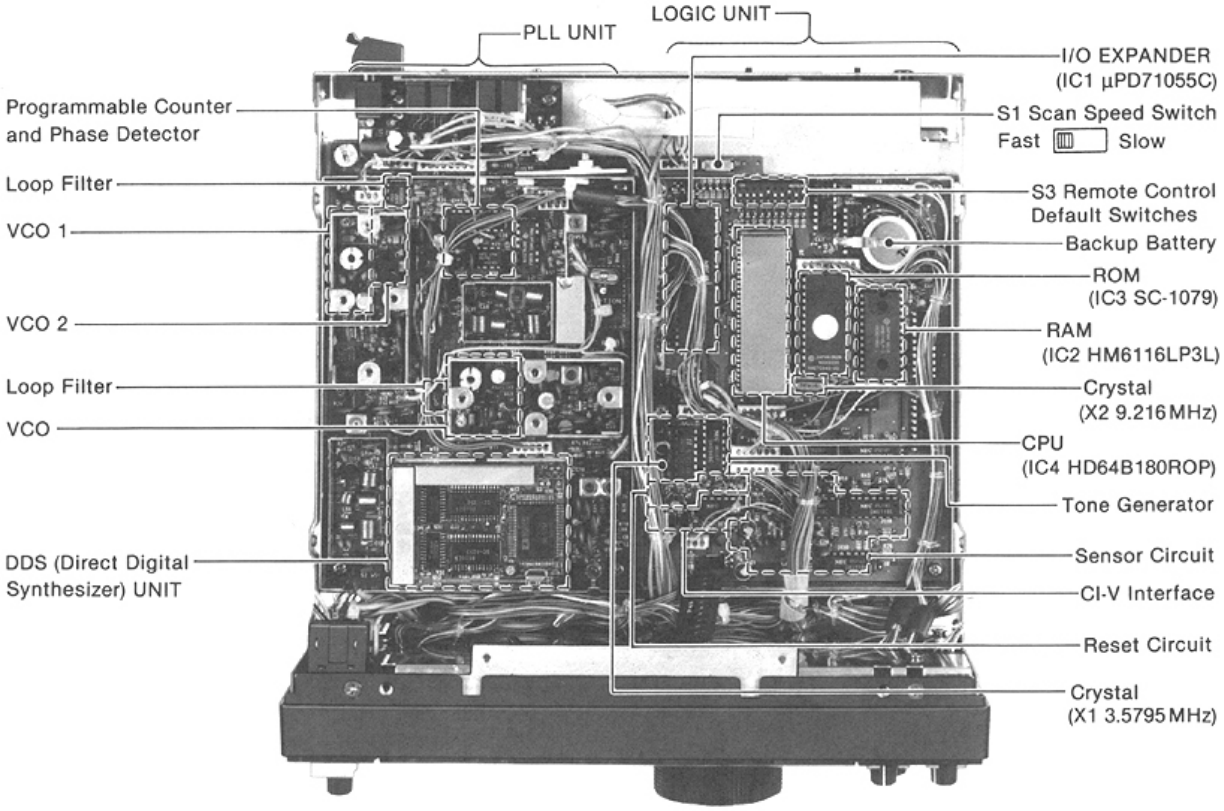

2-2-2 MAIN AND RF YGR UNITS

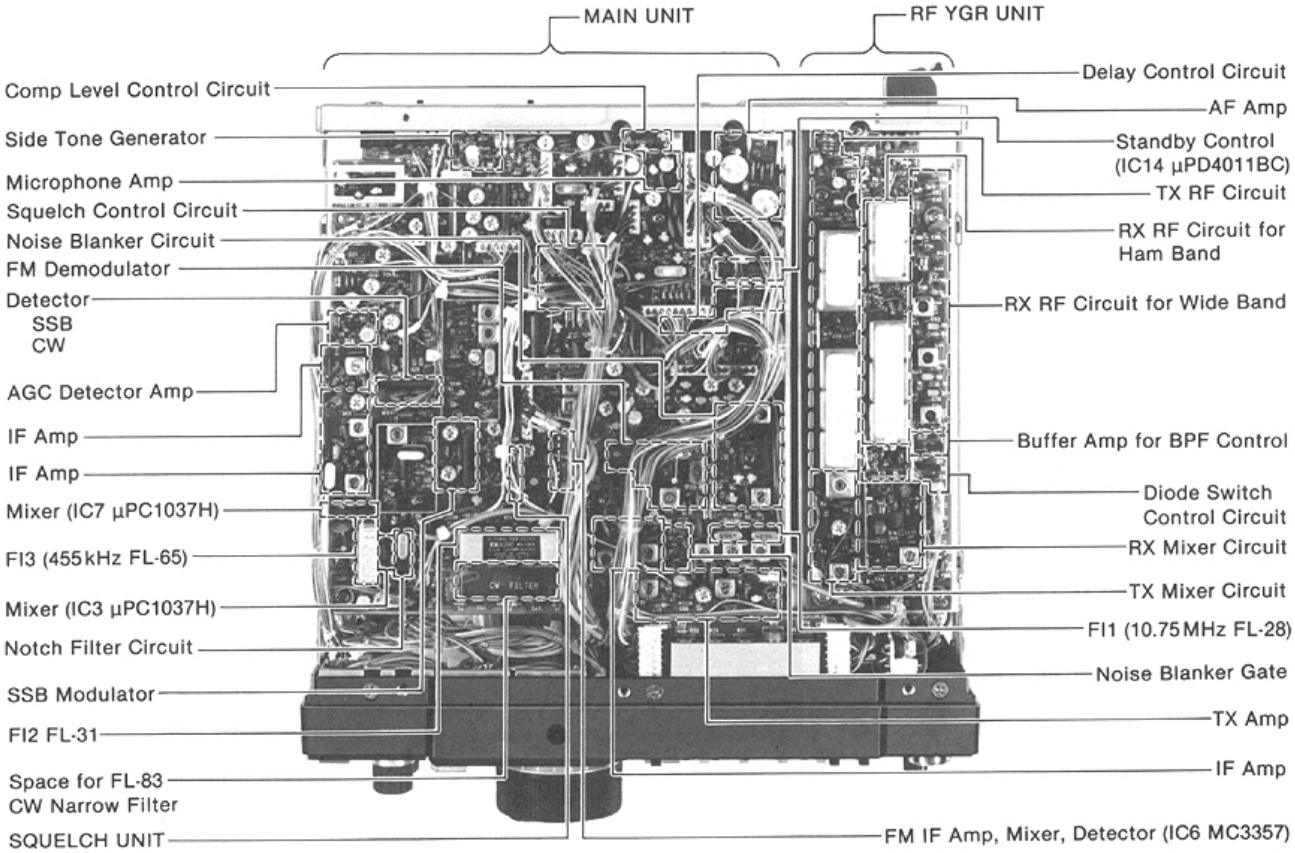

These pictures show the IC-275H model.

Downloaded from www.Manualslib.com manuals search engine

2-2-3 PA AND REG UNITS (IC-275A/E)

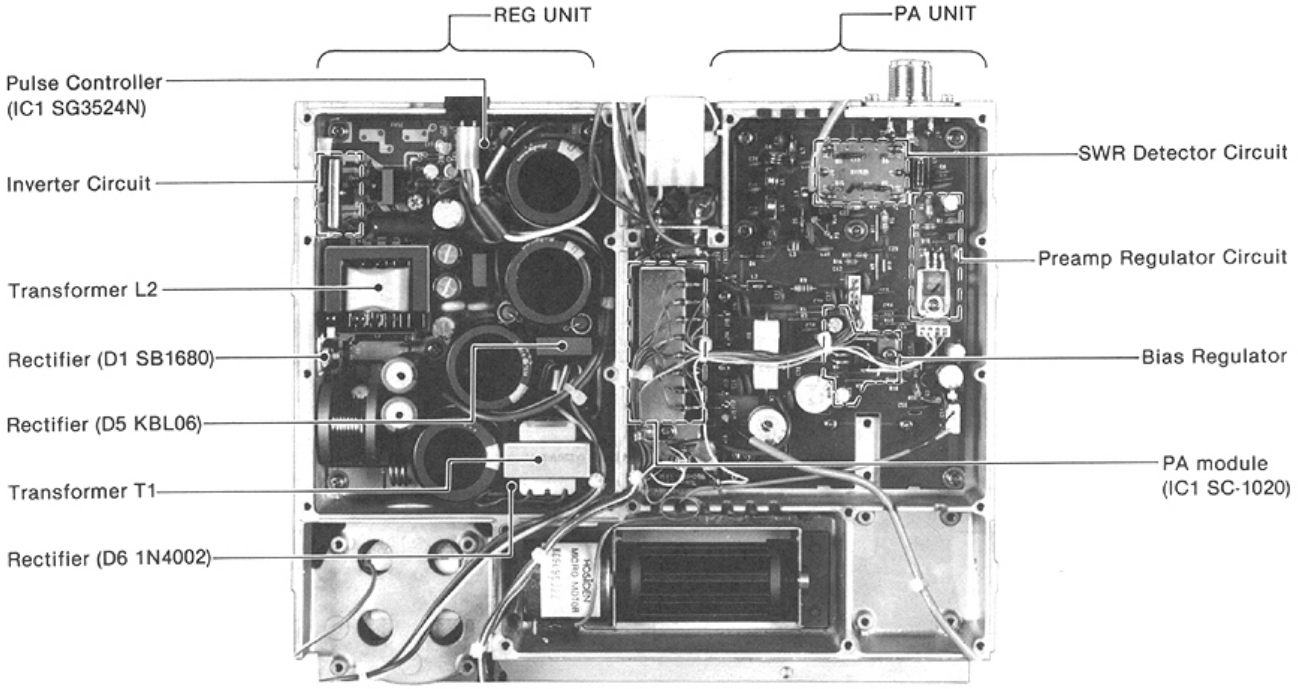

This picture shows the IC-275A/E model.

2-2-4 FILTER, CTRL AND PA UNITS (IC-275H)

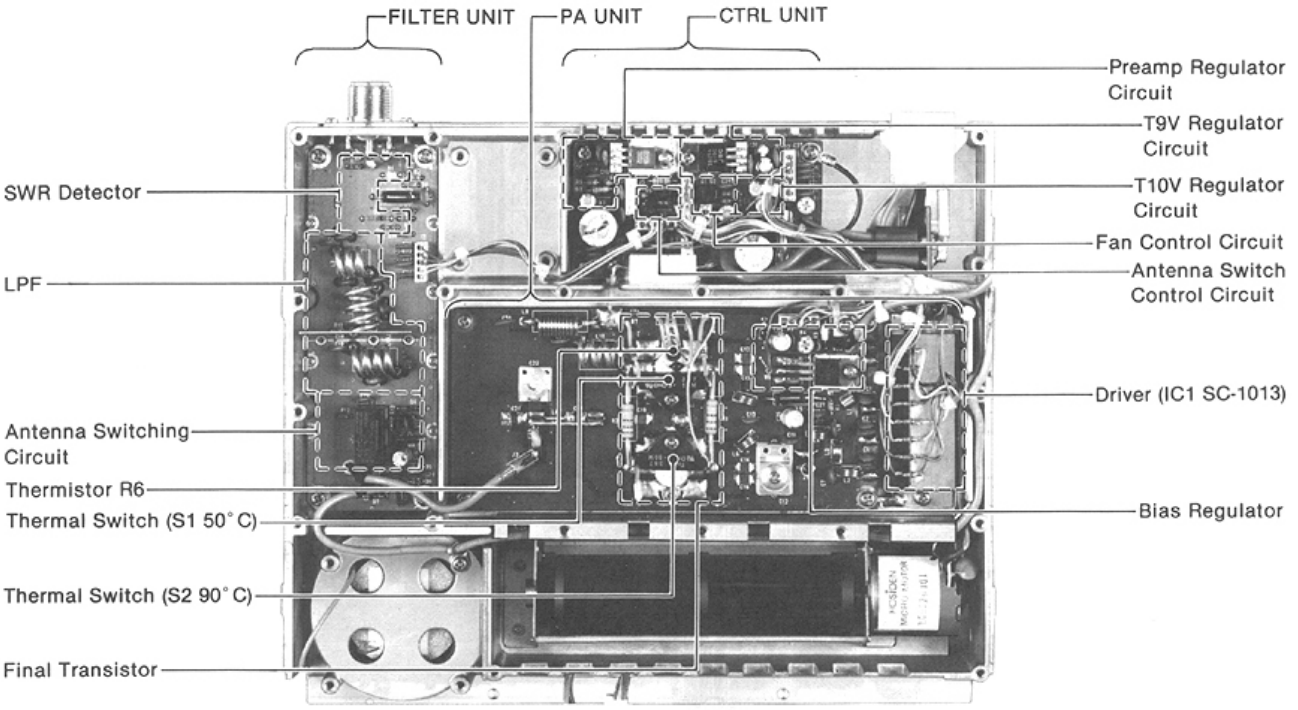

This picture shows the IC-275H model.

Downloaded from www.Manualslib.com manuals search engine

SECTION 3 BLOCK DIAGRAMS

• IC-275A/E/H

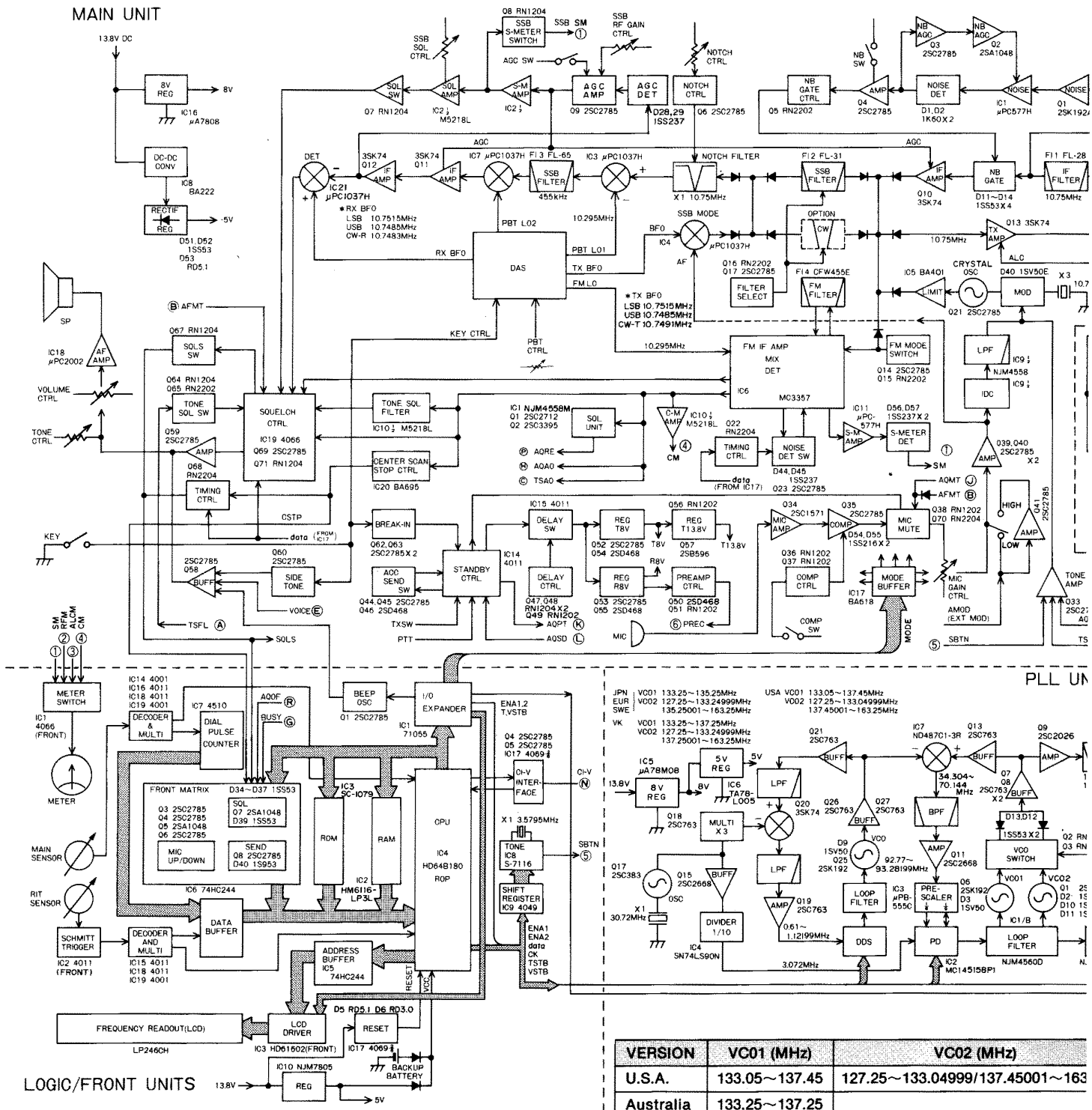

VERSION	VC01 (MHz)	VC02 (MHz)
U.S.A.	133.05~137.45	127.25~133.04999/137.45001~163
Australia	133.25~137.25	127.25~133.24999/137.25001~163
Europe	133.25~135.25	
Sweden		

Downloaded from www.Manualslib.com manuals search engine

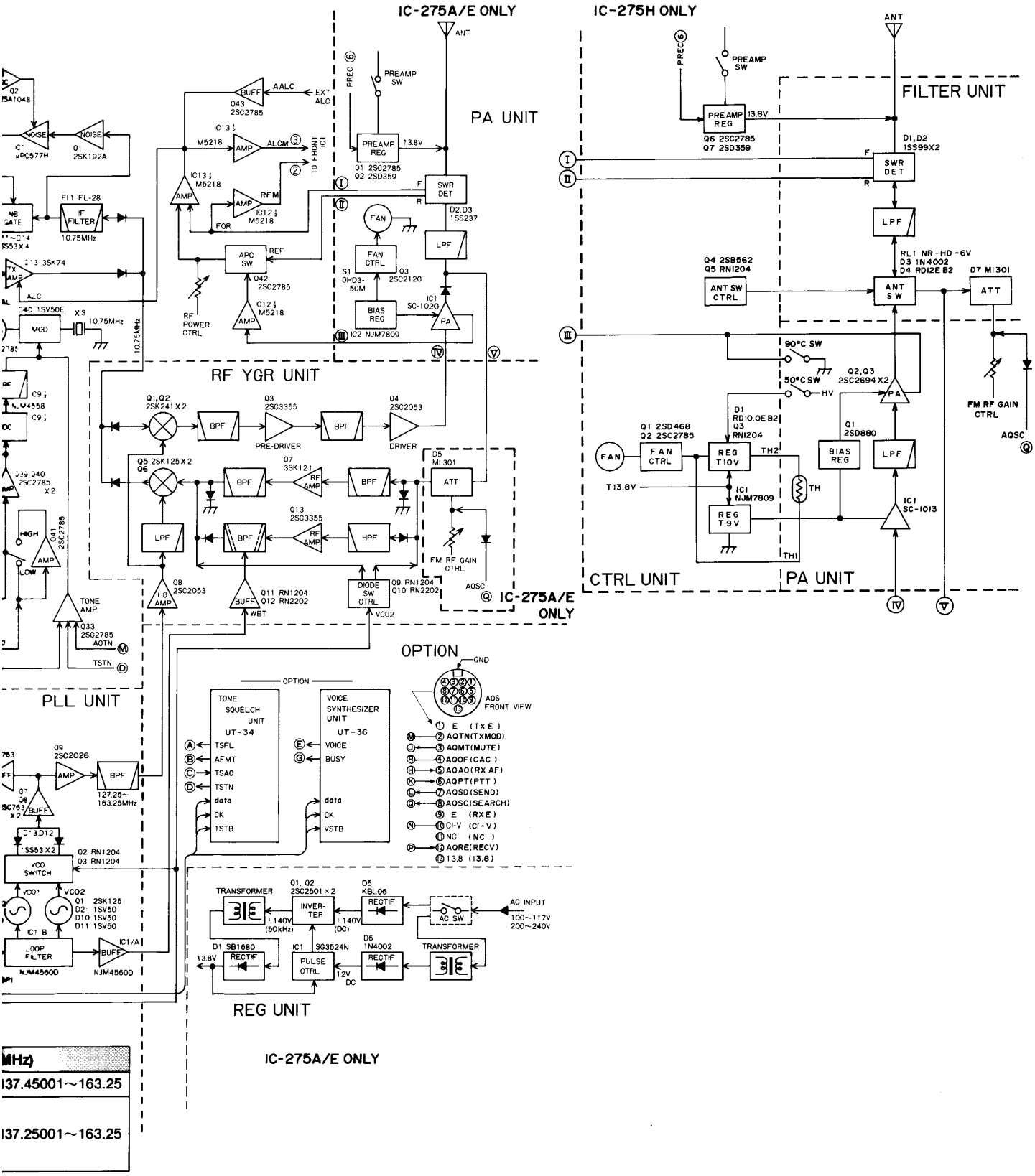

Downloaded from www.Manualslib.com manuals search engine

SECTION 4 CIRCUIT DESCRIPTION

4-1 RECEIVER CIRCUITS

4-1-1 ANTENNA~1st MIXER CIRCUIT

This circuitry makes IF signals from receive signals.

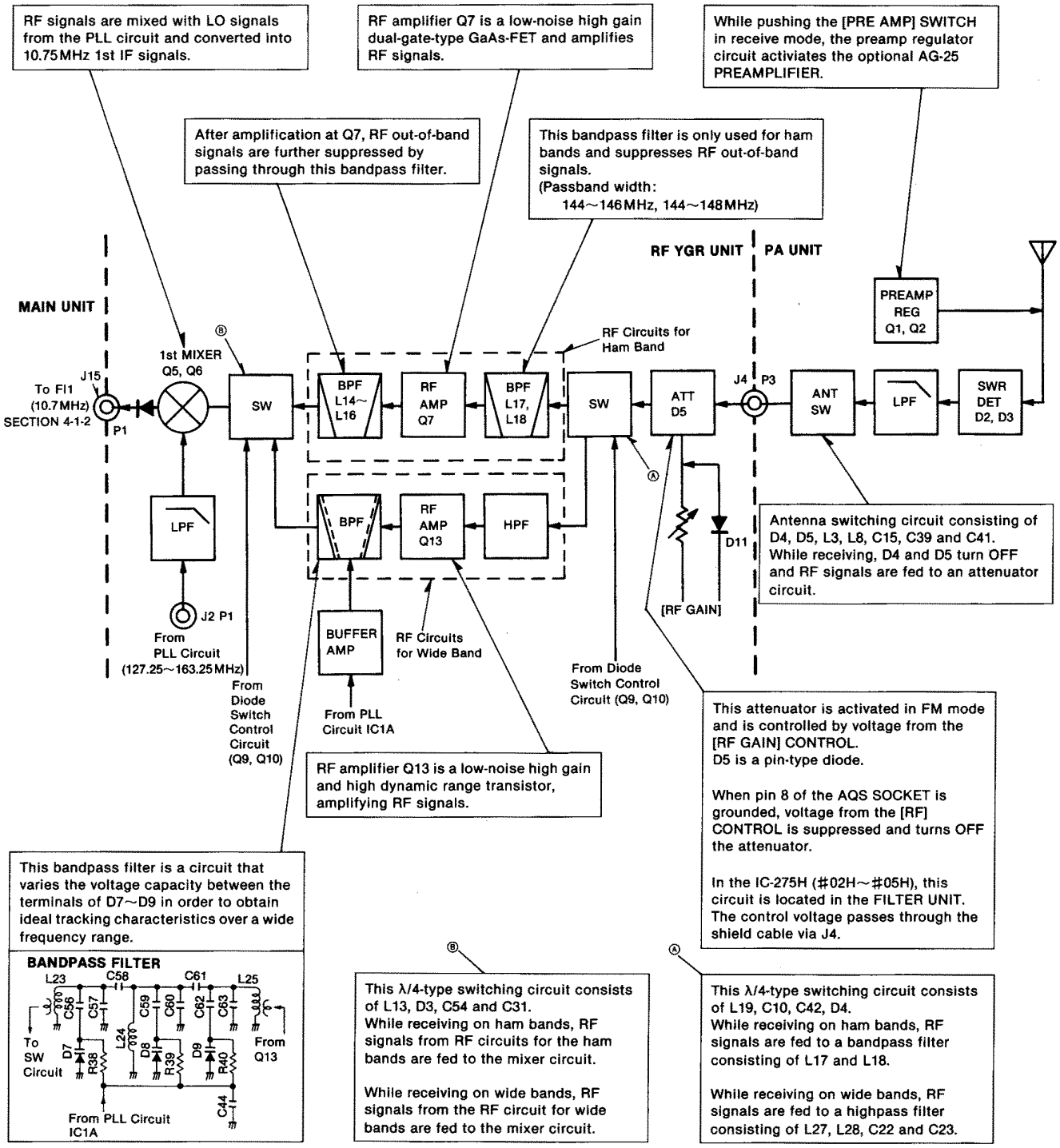

Fig. 1

Downloaded from www.Manualslib.com manuals search engine

4-1-2 NOISE BLANKER CIRCUIT~NOTCH FILTER, FM DETECTOR

This circuitry suppresses pulse-type noise from IF signals.
In FM mode, this circuitry makes AF signals from IF signals.

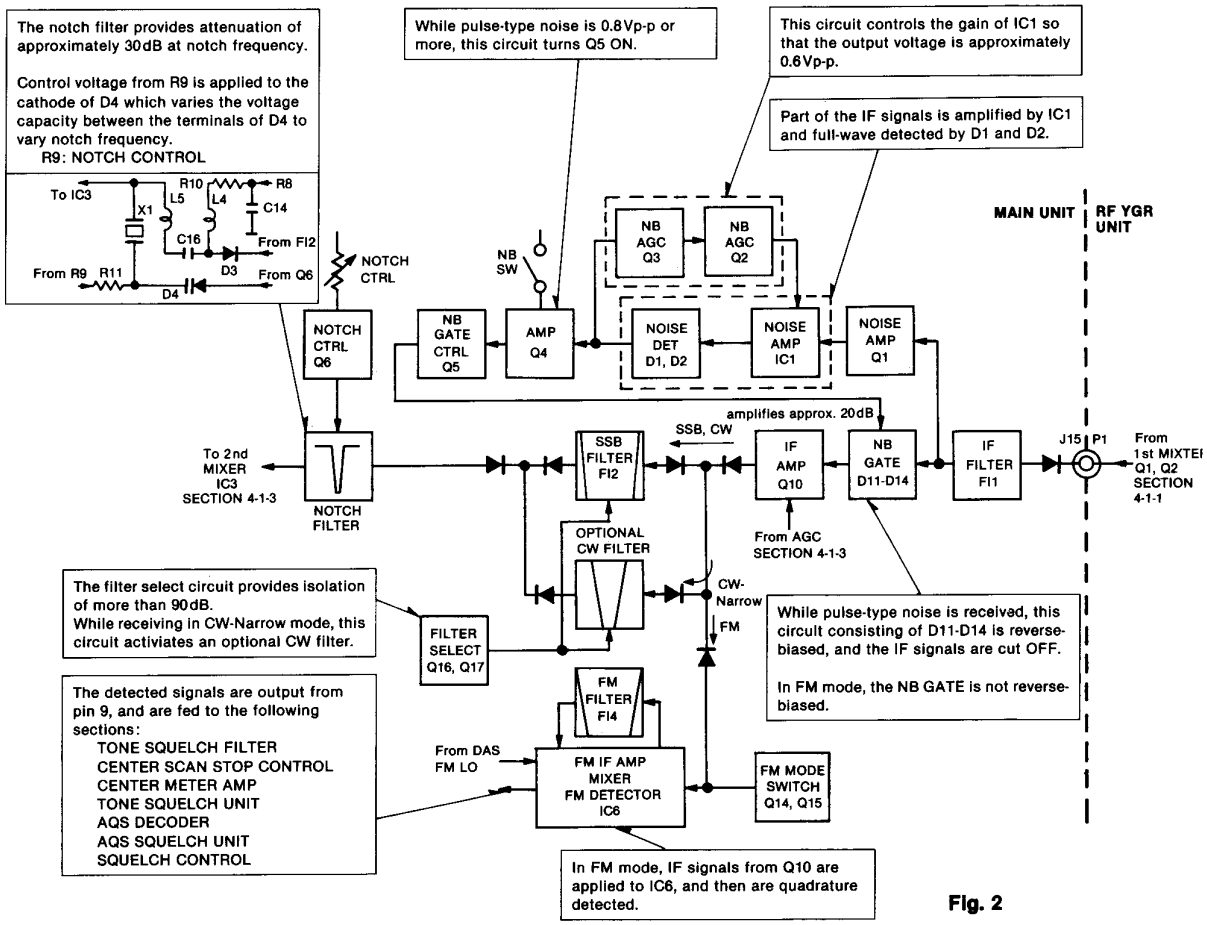

Fig. 2

4-1-3 2nd MIXER CIRCUIT~AF AMP

In SSB or CW mode, this circuitry makes AF signals from IF signals.
In FM mode, AF signals from IC6 are amplified.

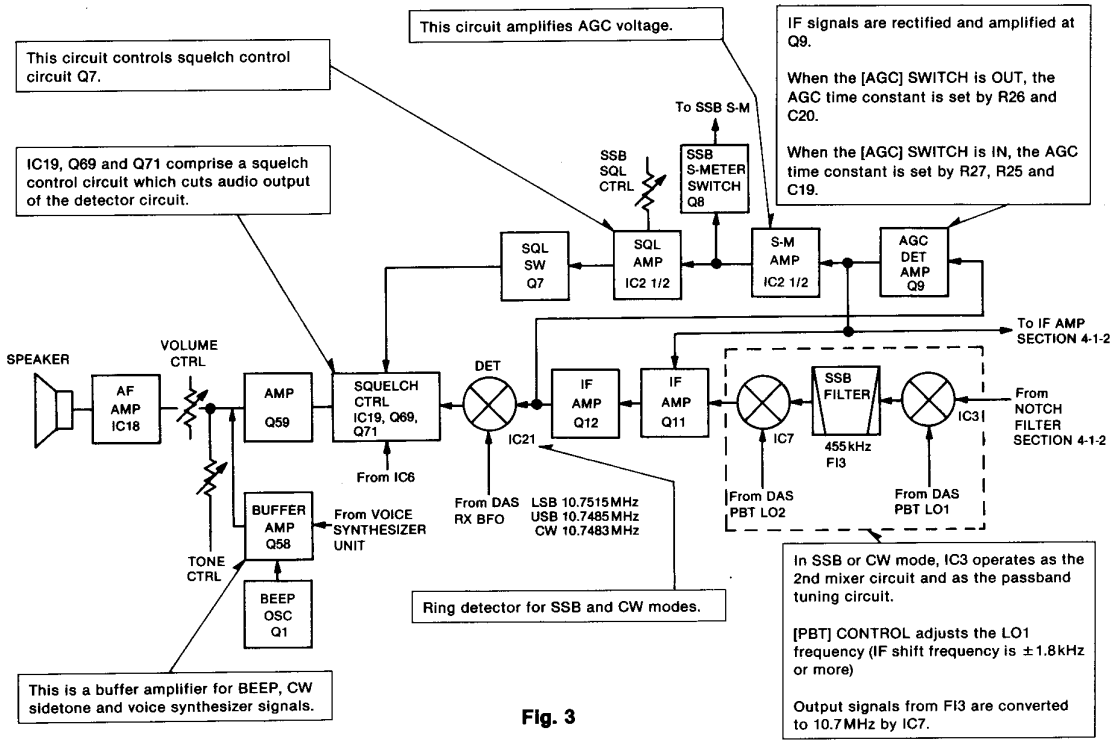

Fig. 3

Downloaded from www.Manualslib.com manuals search engine

4-1-4 FM SQUELCH, FM S-METER AND CENTER METER CIRCUITS

In FM mode, this circuitry performs as FM squelch, FM S-meter and center meter drivers.

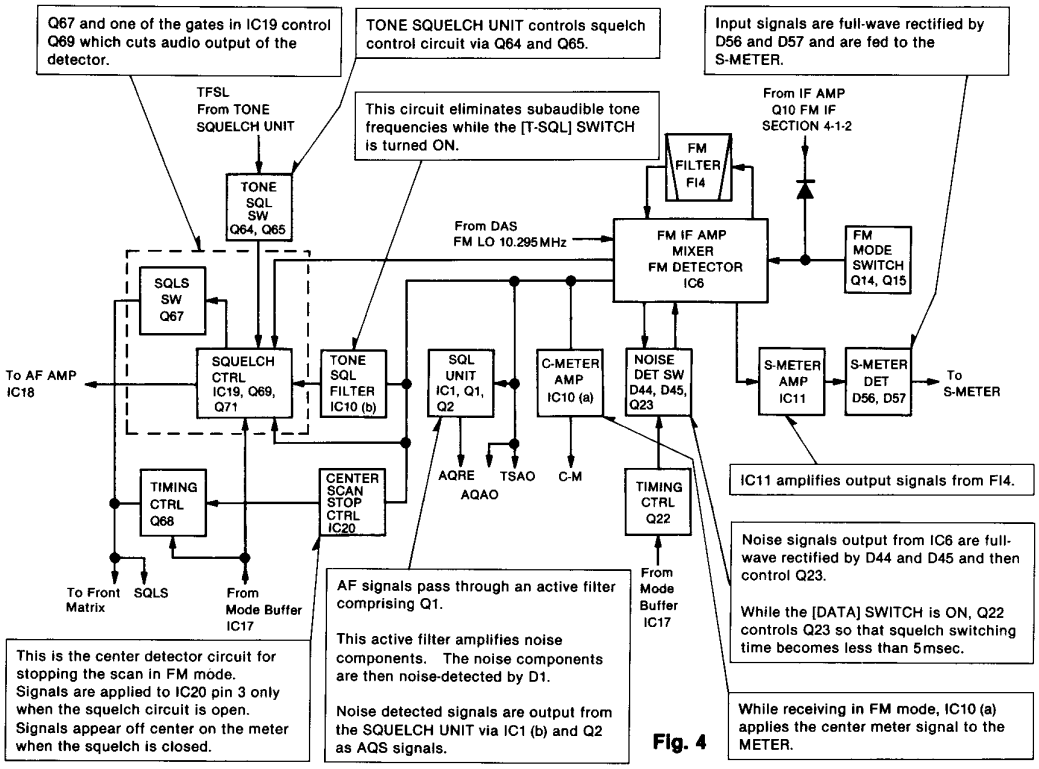

Fig. 4

4-2 TRANSMITTER CIRCUITS

4-2-1 FM, SSB MODE (MICROPHONE~FM MODULATOR, SSB FILTER)

In FM or SSB mode, this circuitry makes transmit IF signals from microphone signals.

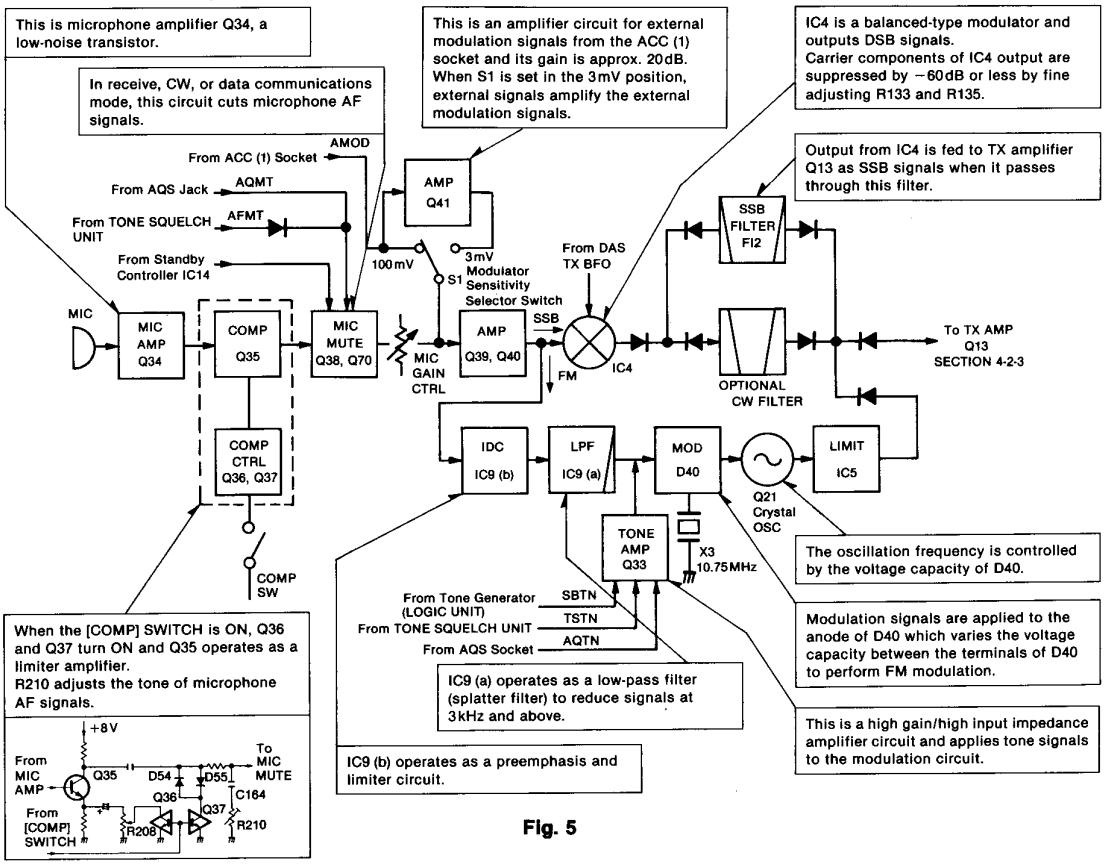

Fig. 5

Downloaded from www.Manualslib.com manuals search engine

4-2-2 CW MODE (KEY~CW FILTER, SSB FILTER)

In CW mode, this circuitry makes transmit IF signals from CW keying signals.

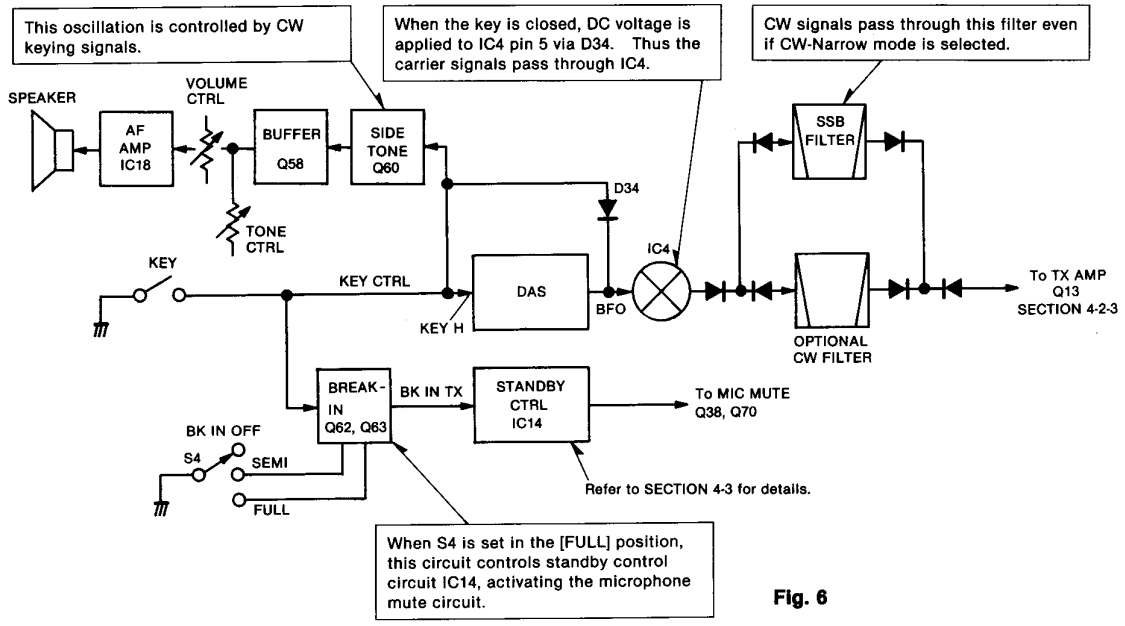

Fig. 6

4-2-3 TX AMP~ANTENNA (IC-275A/E)

This circuitry makes RF signals from transmit IF signals.

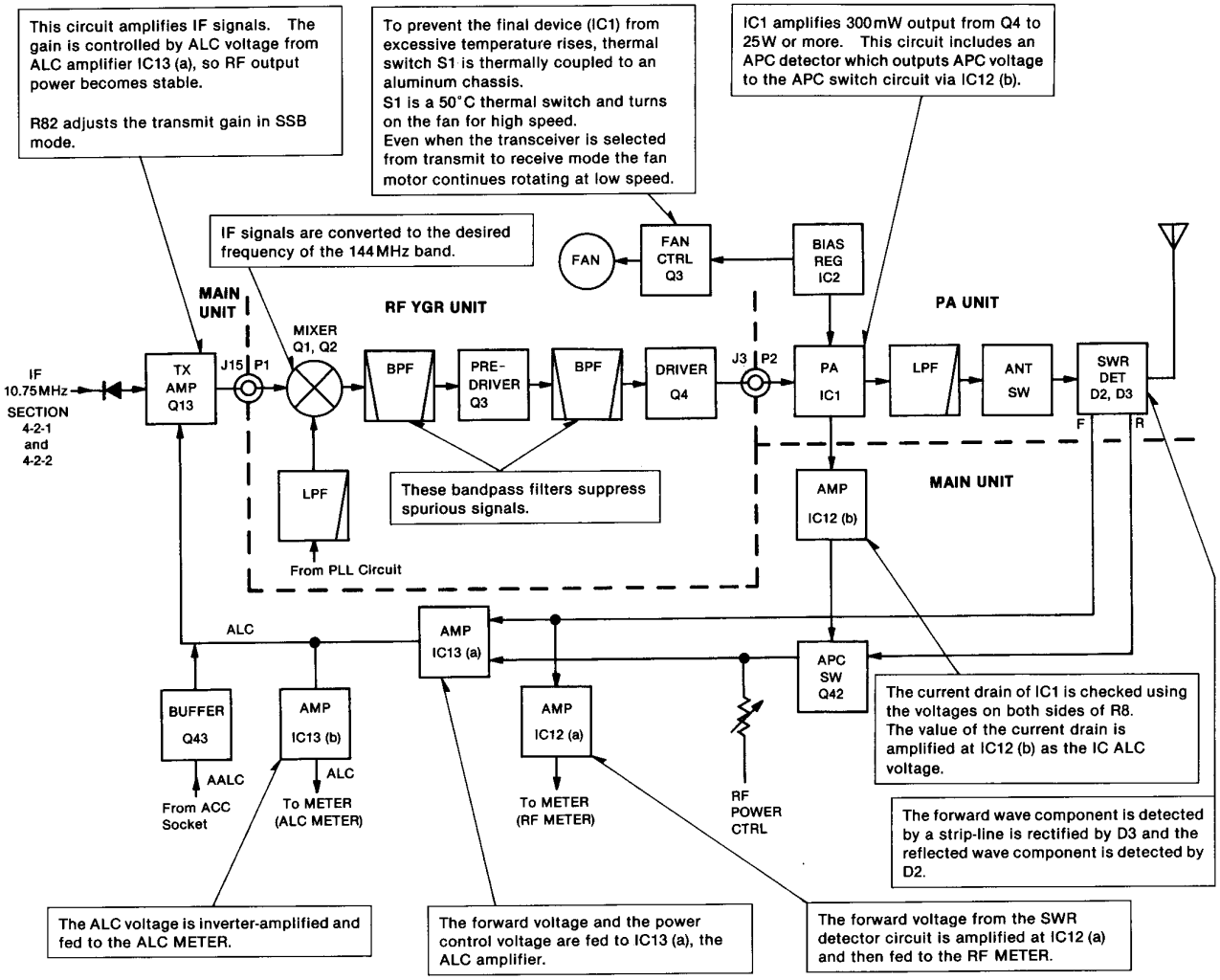

Fig. 7

Downloaded from www.Manualslib.com manuals search engine

(IC-275H)

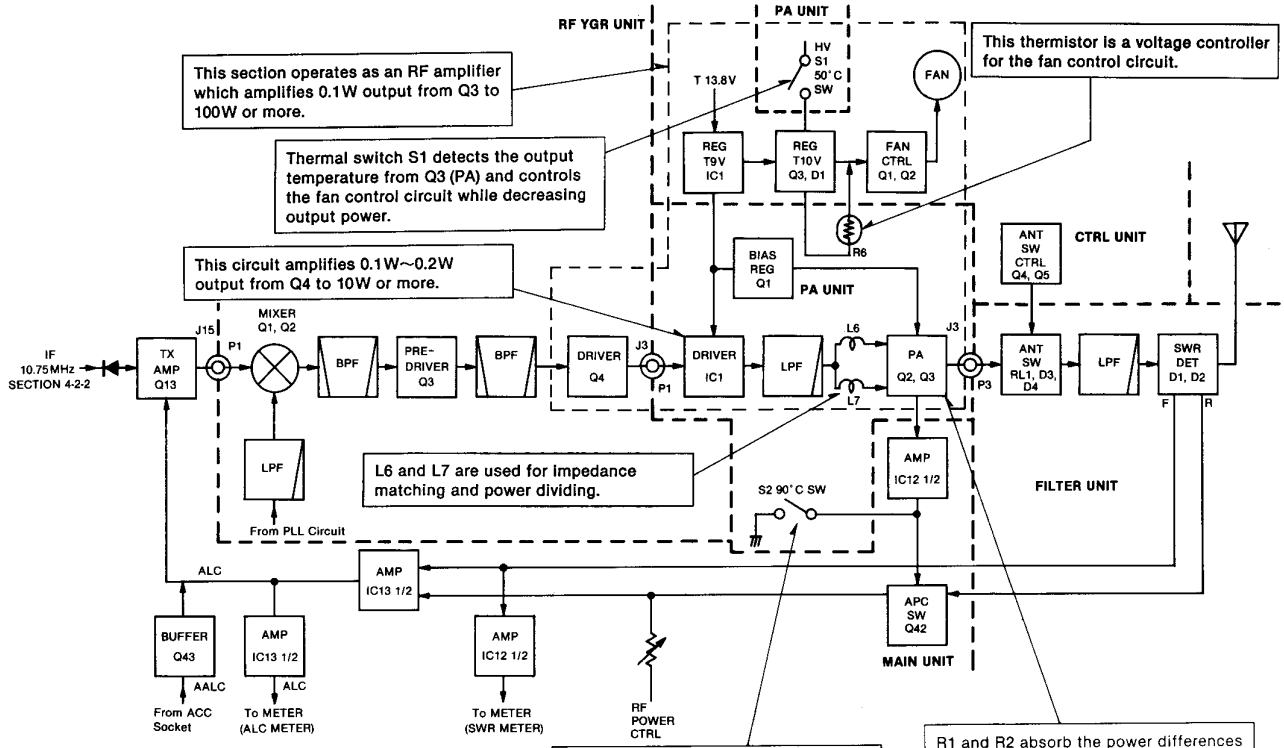

TEMPERATURE (°C)		~50	50~90	90~
THERMAL SWITCH	S1	OFF	ON	ON
	S2	OFF	OFF	ON
FAN SPEED	RECEIVE	OFF	*SLOW~HIGH	
	TRANSMIT	*SLOW~MED		HIGH
TRANSMIT POWER LEVEL		No reduction		50% down

*Fan speed varies by the varying resistance of thermistor R6.

Fig. 8

4-3 STANDBY CONTROL CIRCUIT

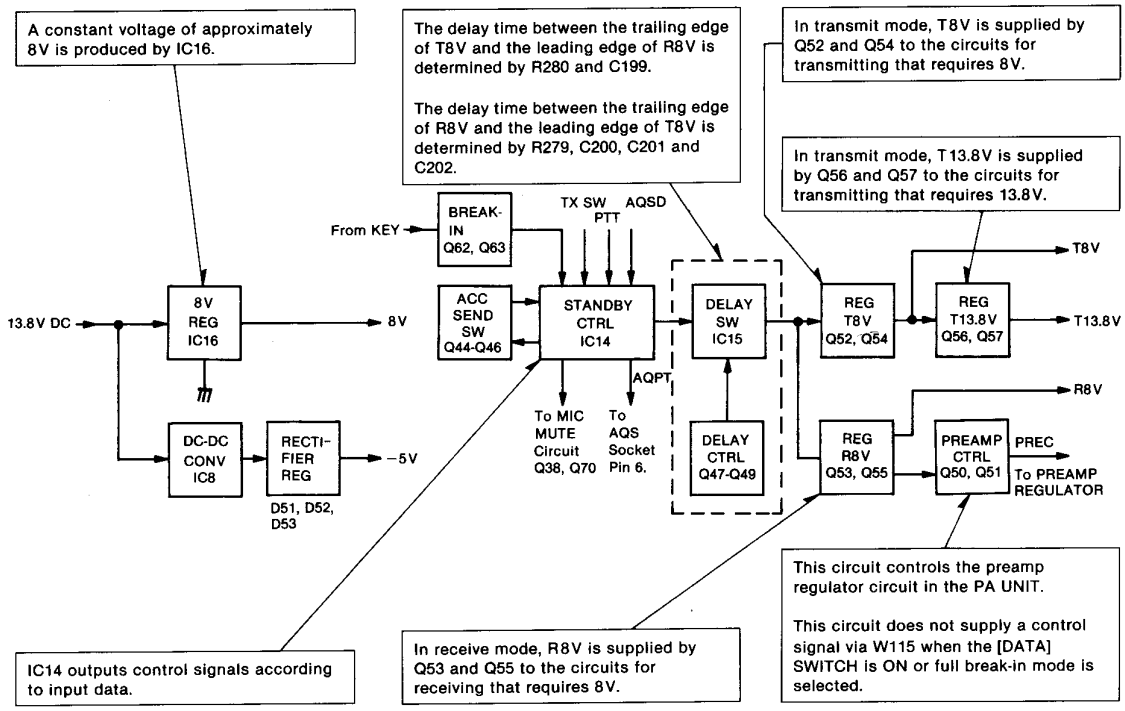

Fig. 9

Downloaded from www.Manualslib.com manuals search engine

4-4 PLL CIRCUITS

4-4-1 GENERAL

The PLL UNIT outputs an oscillator signal for the RF YGR UNIT: a variable 1st LO output of 127.25MHz~163.25MHz that is necessary for the 1st mixer.

PLL CIRCUITS BLOCK DIAGRAM

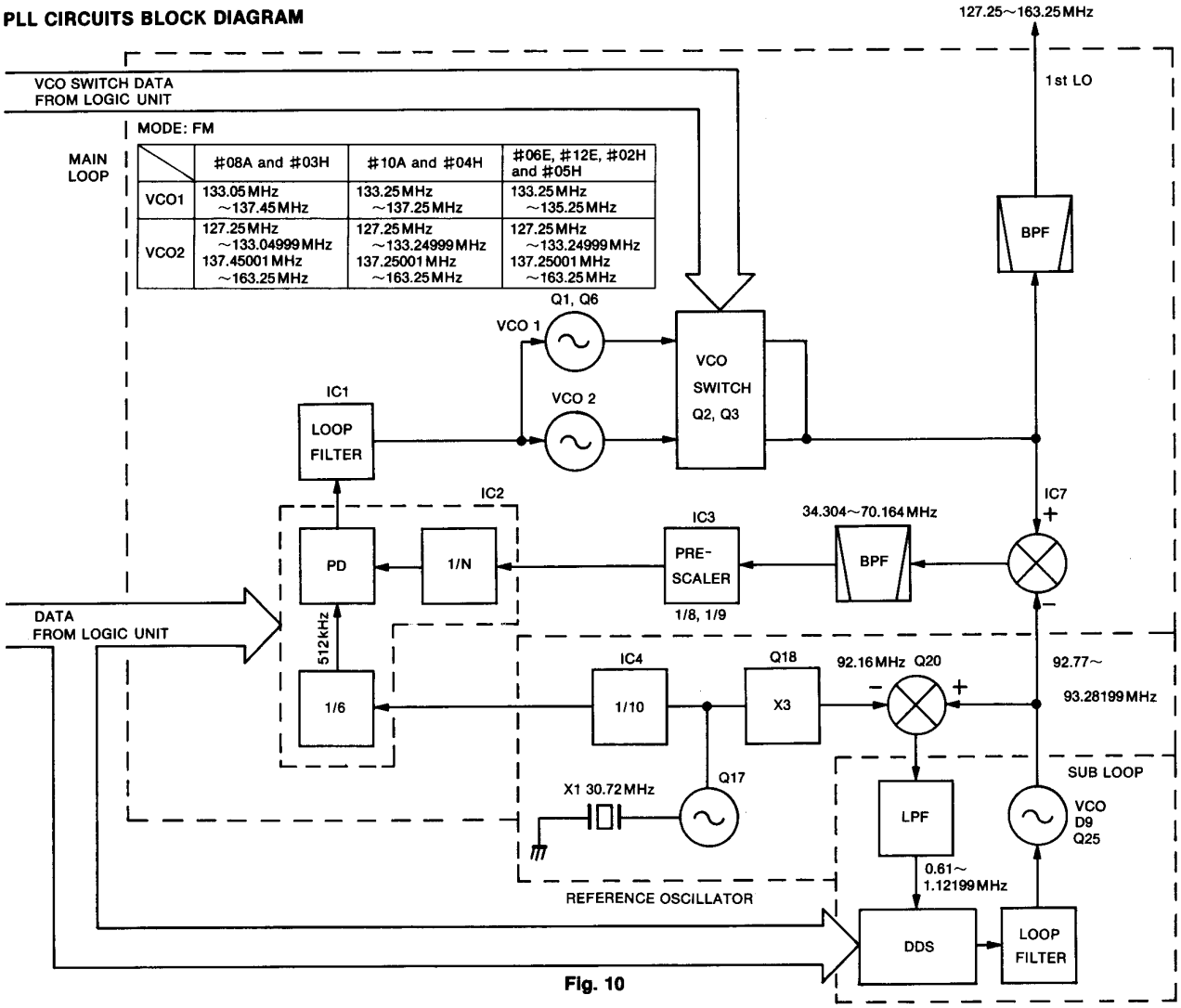

Fig. 10

4-4-2 REFERENCE OSCILLATOR CIRCUIT

The reference oscillator circuit generates a reference frequency for the PLL circuits.

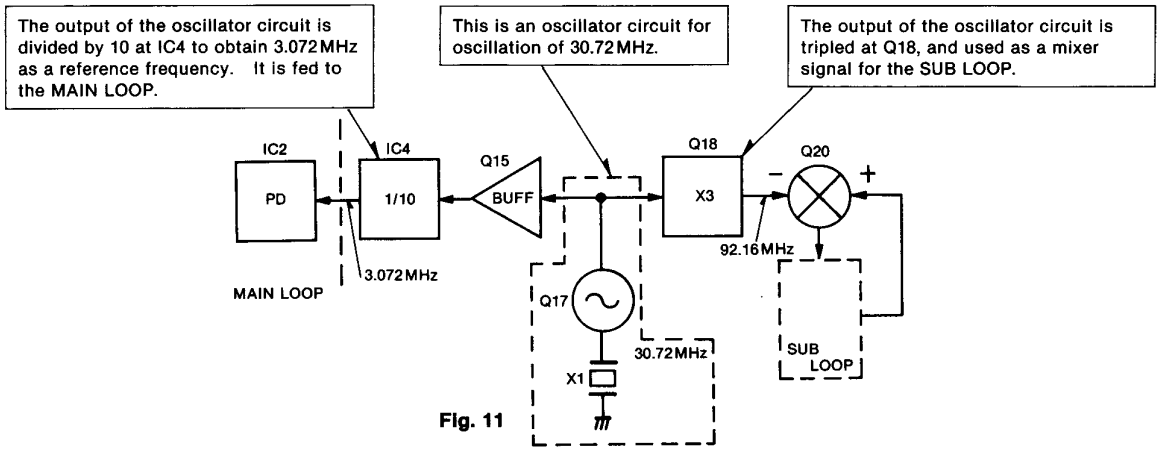

Fig. 11

Downloaded from www.Manualslib.com manuals search engine

4-4-3 MAIN LOOP

The main loop forms the PLL loop and supplies the 1st LO output.
It consists of a combination of a pulse swallow system and mixer system.

The VCO output frequency f_{VC1} is given as:

$f_{VC1} = N_1 \times fr + f_{VC2}$

N_1: Main loop N-data
fr: PLL reference frequency
f_{VC2}: Sub loop frequency [MHz]

Frequency changes are made by changing the f_{VC2} and N_1. The reference frequency (fr) is 512kHz, and the VCO is controlled in 512kHz steps by changing the dividing ratio N_1 of the programmable counter.

A frequency between this step (less than 512kHz) is obtained by f_{VC2} which controls VCO output frequency. The f_{VC1} can be changed in 10Hz steps over the 36MHz range.

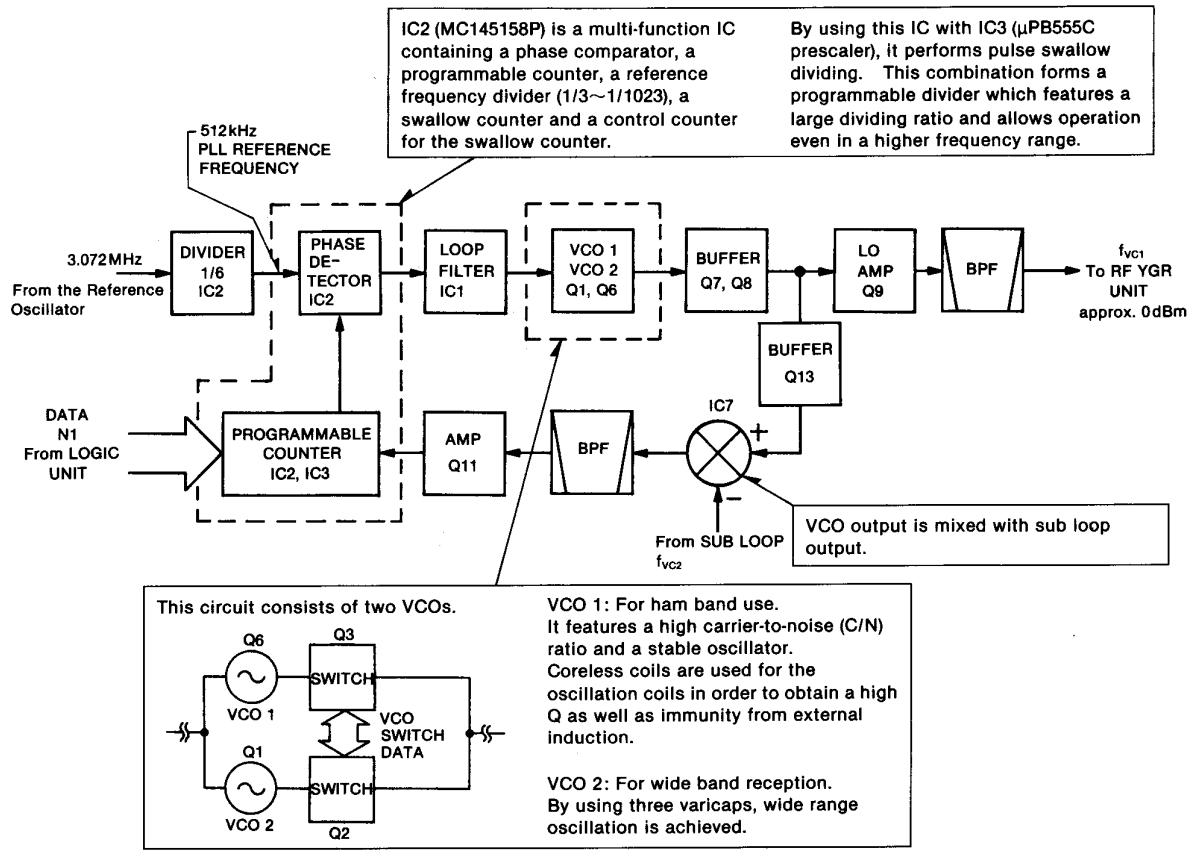

Fig. 12

4-4-4 SUB LOOP

The sub-loop section comprises the DDS UNIT.

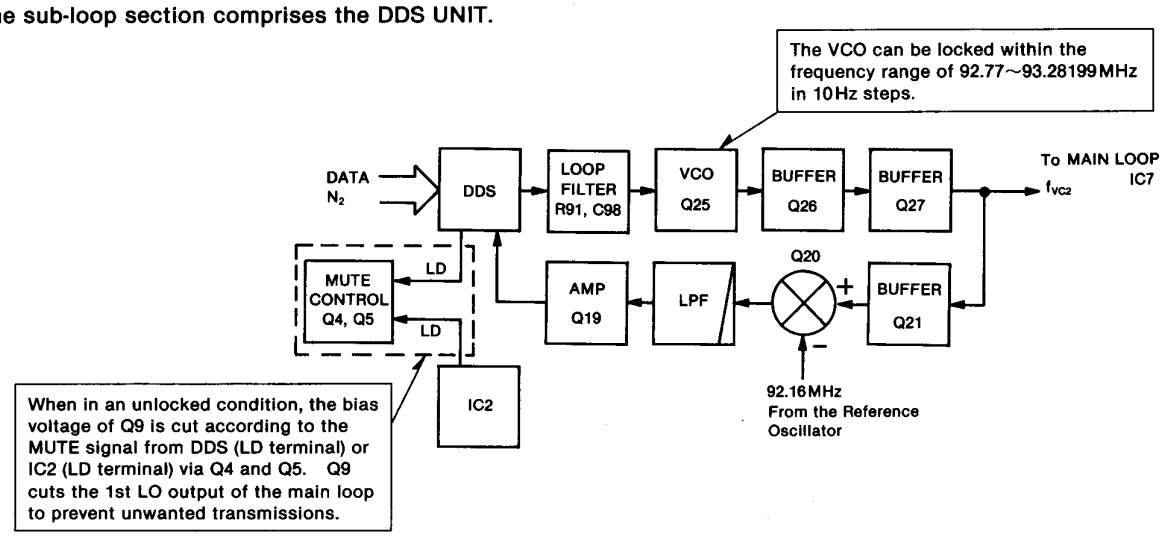

Fig. 13

Downloaded from www.Manualslib.com manuals search engine

4-4-5 PLL DATA

Data for setting the dividing ratios N_1 and N_2 of the programmable dividers are sent from the LOGIC UNIT. The data transfer is in binary code.

How to DRIVE N-DATA

Since there are two locked loops, two kinds of N-data are necessary. Even if the output frequencies from the PLL circuits in all modes are the same, the display frequencies are different depending on the operating mode.

For example, if the same frequency is displayed for FM mode, the frequency will be 900Hz lower in CW mode, 1.5kHz higher in USB mode and 1.5kHz lower in LSB mode.

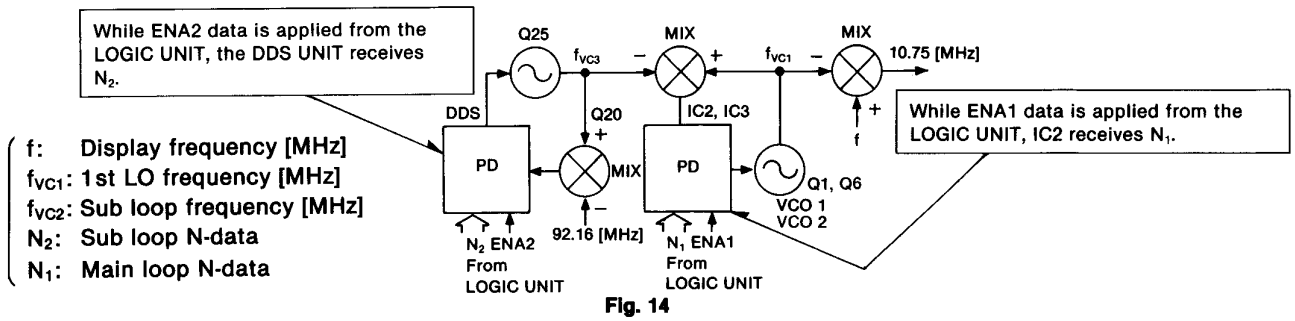

Fig. 14

To obtain N-data from the display frequency (fMHz), calculate using the following formulas.

(a) FM mode

Main loop N-data: N_1

$$Na = (f - 103.52) \div 0.512$$

N_1 is the integer part of Na.

Sub loop N-data: N_2

$$Nb = (f - 102.91 - 0.512 \times N_1) \times 10^5$$

N_2 is the hexadecimal of Nb.

example: 145.6789MHz
(Display frequency, In FM mode)

Main loop N-data
$Na = (145.6789 - 103.52) \div 0.512 \fallingdotseq 82.3$
$\therefore N_1 = 82$

Sub loop N-data
$Nb = (145.6789 - 102.91 - 0.512 \times 82) \times 10^5$
$= 78490$
$\therefore N_2 = 1329A$ (H)

(b) CW, LSB or USB mode

Main loop N-data: N_1

$$Nc = (f - 103.52 - f_{OFFSET}) \div 0.512$$

N_1 is the integer part of Nc.

Sub loop N-data: N_2

$$Nd = (f - 102.91 - 0.512 \times N_1 - f_{OFFSET}) \times 10^5$$

N_2 is the hexadecimal of Nd.

f_{OFFSET} of each mode:
CW mode: 0.9×10^{-3}
LSB mode: 1.5×10^{-3}
USB mode: -1.5×10^{-3}

4-4-6 DIRECT DIGITAL SYNTHESIZER (DDS UNIT)

The DDS circuit consists of 5 ICs.

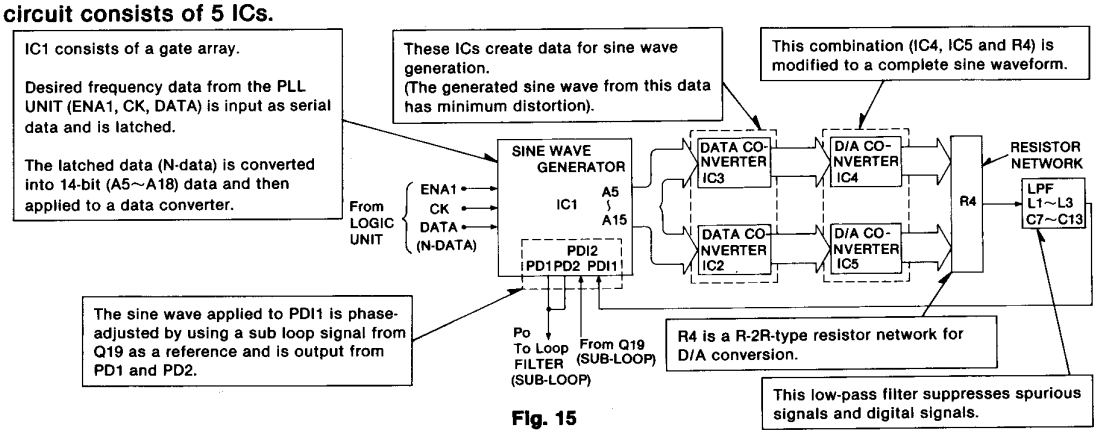

Fig. 15

Downloaded from www.Manualslib.com manuals search engine

4-5 LOGIC CIRCUITS

Functions of the LOGIC circuits include the control of frequency, the processing of mode signals, and data output for the PLL UNIT and DISPLAY UNIT. The LOGIC circuits are composed of an 8-bit CMOS CPU, a 2k byte RAM, 28k byte ROM and an I/O expander IC.

4-5-1 CPU

Functions are assigned to the pins of the CPU as shown at right. Pins where no functions are left unconnected.

Addresses are assigned to ROM and RAM and to all the other peripheral devices.

4-5-2 RESET CIRCUIT

The reset circuit is connected as shown below and supplies power from the power supply to reset IC4 and IC1.

The voltages at three points (Ⓑ～Ⓓ) change as shown on the graph below as the voltage from the power supply changes (point Ⓐ).

CPU PORT ALLOCATIONS

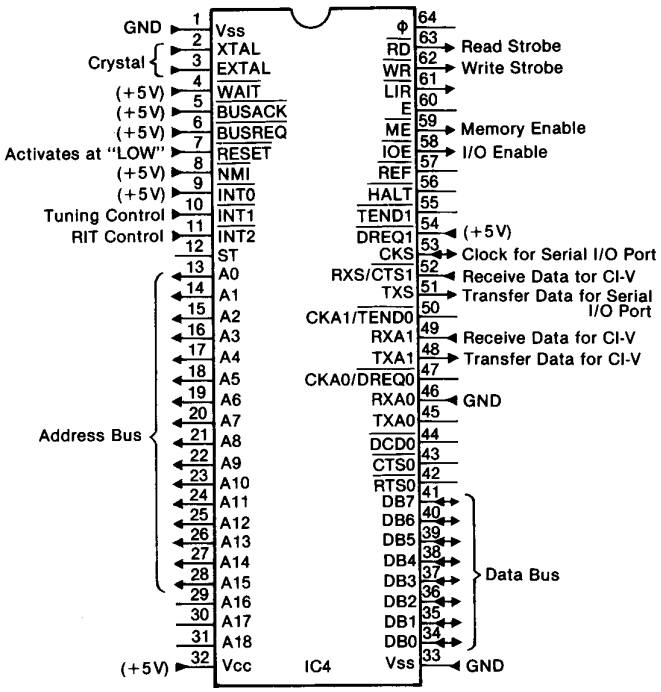

Fig. 16

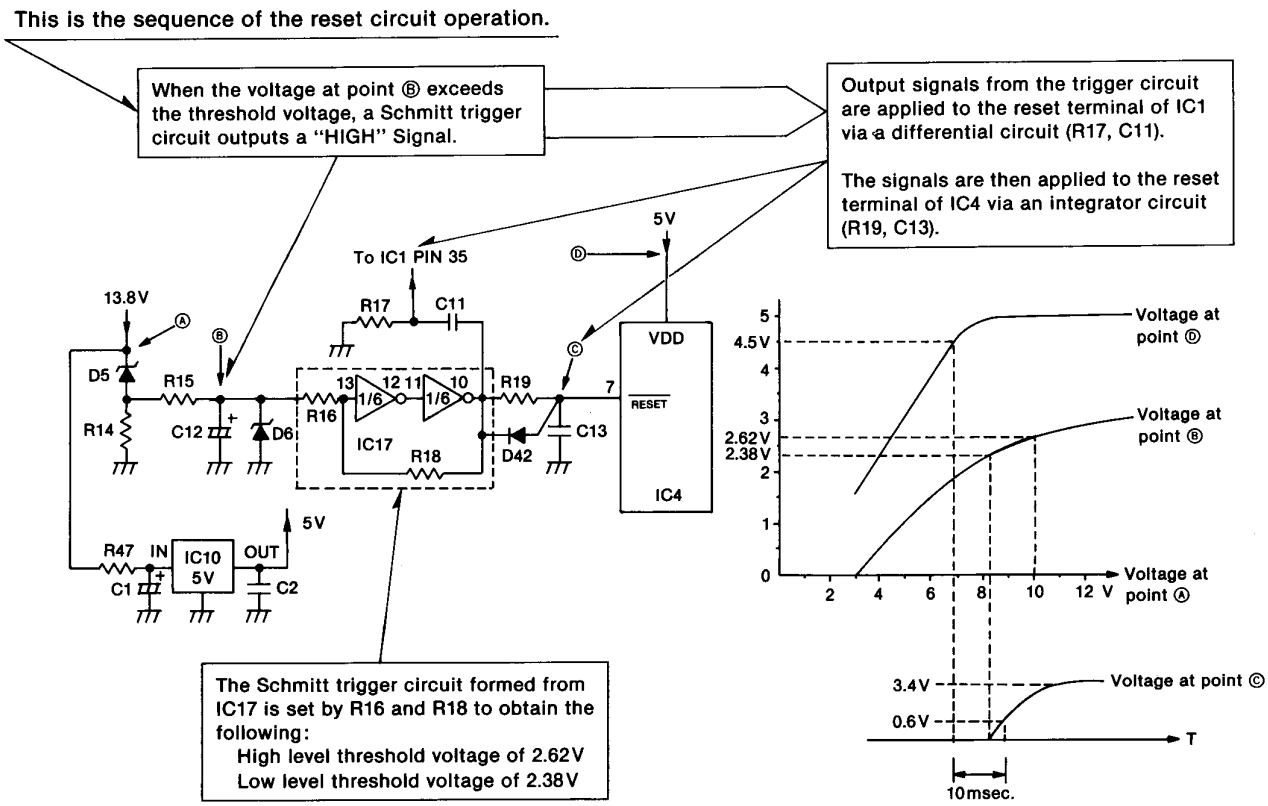

Fig. 17

Downloaded from www.Manualslib.com manuals search engine

4-5-3 SENSOR CIRCUIT

The sensor circuit performs waveform shaping of the dial pulse from the 250 pulses/revolution sensor. The tuning speed selector section formed from IC17 automatically switches between normal speed and 4 times speed according to the number of generated pulses (varies according to whether the TUNING CONTROL is rotated quickly or slowly).

4-5-4 RIT UP/DOWN SENSOR CIRCUIT

Pulse signals from the RIT SENSOR in the FRONT UNIT are fed to CPU IC4 via IC6 and through an RIT UP/DOWN sensor consisting of IC19 and IC15 with interrupt signals from IC18 at pin 11.

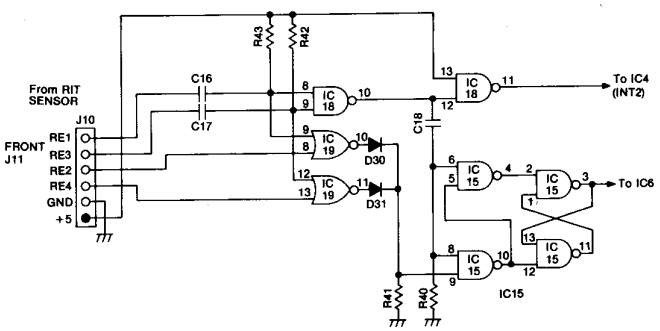

Fig. 18

4-5-5 MATRIX

MATRIX TABLE

	Y0	Y1	Y2	Y3	Y4	Y5	Y6	Y7	
		CALL	Mch UP	LSB	MIC CK	SIMP/DUP	BAND INITIAL 0	CI-V ADDRESS 0	DB0
		VFO A/B	Mch DOWN	USB	MIC U/D	CHECK	1	1	DB1
		MEMORY READ	RIT ON/OFF	CW/N	SKIP	SET	2	2	DB2
		A=B			MODE-S	TONE ON/OFF	3	3	DB3
	PITCH 0	MW	RIT CLEAR		SCAN SPEED	TONE SQL ON/OFF	4	4	DB4
	1	M ▶ VFO	SCAN S/S	FM		LOCK	CI-V DATA LENGTH	5	DB5
	2	M-CLEAR	SQL		OFF BAND TX INHIBIT	SPCH START	CI-V BAUD RATE 0	6	DB6
	3	SPLIT	SEND	DATA	BAND EXPAND (138-174 MHz)	SPCH BUSY	1	CI-V TRANSCEIVE FLAG	DB7

Fig. 19

Y0 → DB4~DB7 (PITCH)
This matrix sets the frequency step tuning rate.

Y1 → DB0 (CALL)
This matrix is used for the [CALL] SWITCH.

Y1 → DB1 (VFO A/B)
This matrix selects VFO A or VFO B via the [VFO] SWITCH.

Y1 → DB2 (MEMORY READ)
This matrix is used for the [MEMORY] SWITCH.

Y1 → DB3 (A=B)
This matrix is used for the [A=B] SWITCH.

Y1 → DB4 (MW)
This matrix is used for the [MW] SWITCH.

Downloaded from www.Manualslib.com manuals search engine

Y1 → DB5 (M▶VFO)
This matrix is used for the [M▶VFO] SWITCH.

Y1 → DB6 (M-CLEAR)
This matrix is used for the [M-CL] SWITCH.

Y1 → DB7 (SPLIT)
This matrix is used for selecting the relationship of the two VFO frequencies.

Y2 → DB0, Y2 → DB1 (MEMO CH)
These matrices are used for the [MEMO] CHANNEL SELECTOR CONTROL.

Y2 → DB2 (RIT ON/OFF)
This matrix is used for the [RIT] SWITCH.

Y2 → DB4 (RIT CLEAR)
This matrix is used for the [RIT-CL] SWITCH.

Y2 → DB5 (SCAN START/STOP)
This matrix is used for the [SCAN] SWITCH.

Y2 → DB6 (SQL)
This matrix is for the SCAN TIMER function.

In PROGRAMMED SCAN or MEMORY CHANNEL SCAN mode, this matrix is activated.

When a signal is received, scan stops and then starts again after 3 or 10 seconds. These times depend on the type of signal received.

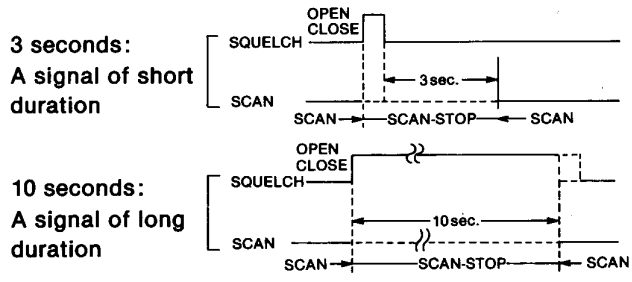

Fig. 20

Y2 → DB7 (SEND)
This matrix is used for switching the transceiver from transmit to receive mode and vice versa.

Y3 → DB0 (LSB)

Y3 → DB1 (USB)

Y3 → DB2 (CW/N)

Y3 → DB5 (FM)
FREQUENCY DIFFERENCES IN VARIOUS MODES

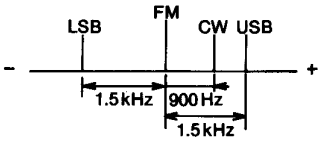

Fig. 21

Y3 → DB7 (DATA)
This matrix is used for the [DATA] SWITCH.
This matrix is for PACKET or AMTOR communications which require rapid receive and transmit switching times. (This matrix does not function in CW mode.)

• Transmit and receive switching time

[DATA] SWITCH	FM mode	SSB, CW mode
OFF	15~20msec.	20~25msec.
ON	approx. 3msec.	approx. 7msec.

Note: While the [DATA] SWITCH is ON, the optional AG-25 PREAMPLIFIER is not activated.

• Squelch close and open switching time
Squelch Close → Open:

[DATA] SWITCH	FM mode	SSB, CW mode
OFF	approx. 40msec.	approx. 15msec.
ON	approx. 4msec.	approx. 5msec.

Squelch Open → Close:

[DATA] SWITCH	FM mode	SSB, CW mode
OFF	approx. 350msec.	*1
ON	approx. 200msec.	

*1 These periods are varied by [AGC] SWITCH setting and receive signal strength.

Above times show time required for squelch to open/close at squelch threshold point.

• MIC MUTE
When the [DATA] SWITCH is turned ON the microphone signals are muted while transmit mode is selected using the [XMIT] SWITCH or the ACC SOCKET SEND line (except when using the microphone PTT SWITCH).

Downloaded from www.Manualslib.com manuals search engine

Y4 → DB0 (MIC CK), Y4 → DB1 (MIC UP/DOWN)
These matrices are used for changing frequencies by using the microphone with the UP/DOWN SWITCHES.

When the [DOWN] SWITCH is pushed, the matrix "Y4 → DB0" turns ON. When the [UP] SWITCH is pushed, the matrices "Y4 → DB0" and "Y4 → DB1" turn ON.

Y4 → DB2 (SKIP)
This matrix is used for the [SKIP] SWITCH.

Y4 → DB3 (MODE-S)
This matrix is used for the [MODE-S] SWITCH.

Y4 → DB4 (SCAN SPEED)
This matrix is used for the [SCAN SPEED] SWITCH.

Scan speed switch (S1)	Scan speed
Fast (ON)	20 channels/sec.
Slow (OFF)	10 channels/sec.

Y4 → DB6 (OFF BAND TRANSMIT INHIBIT)
This matrix is used for the OFF BAND TRANSMIT INHIBIT function.
When D43 is installed on the LOGIC UNIT, this matrix is in the ON position.

Y4 → DB7 (BAND EXPAND)
This matrix sets the bandwidth of the IC-275A/E/H.
When D44 is installed on the LOGIC UNIT, this matrix is in the ON position.

Y5 → DB0 (SIMP/DUP)
This matrix is used for selecting simplex or duplex mode operation.

Y5 → DB1 (CHECK)
This matrix is used for the [CHK] SWITCH.

Y5 → DB2 (SET)
This matrix is used for the [SET] SWITCH.

Y5 → DB3 (TONE ON/OFF)
(#08A, #03H)
This matrix is used for activating the built-in subaudible tone unit.
(#06A, #02H)
This matrix is used for transmitting the 1750Hz tone call.

Y5 → DB4 (TONE-SQL ON/OFF)
This matrix is used for the [T-SQL] SWITCH.

Y5 → DB5 (LOCK)
This matrix is used for the [LOCK] SWITCH.

Y5 → DB6 (SPEECH START), Y5 → DB7 (SPEECH BUSY)
These matrices are used for the [SPCH] SWITCH.

Y6 → DB0~DB4 (BAND INITIAL)
These matrices determine frequency range, initial offset, etc., for each transceiver version.

Y6 → DB5 (CI-V DATA LENGTH)
This matrix is for the ICOM CI-V system.
When D25 is installed on the LOGIC UNIT, this matrix is in the ON position.

Y6 → DB5	CI-V DATA LENGTH
OFF	4 byte
ON	5 byte

Y6 → DB6, DB7 Y7 → DB0~DB7
Transmitters and receivers using the ICOM CI-V System exchange serial information in the PACKET format. The contents of a data PACKET can be changed by using the S3 switches (switches 1 to 10) on the LOGIC UNIT.

S3 SWITCHES (Switches 1~10)

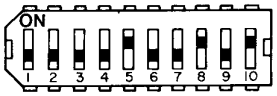

The S3 SWITCHES shown above are located on the LOGIC UNIT.

Fig. 22

Switches 1~7 (For setting an address with the transceiver):
These switches determine the transceiver's address number (00H~7FH).
Matrix configuration: Y7 → DB0~DB6

ICOM Standard address number:

MODEL	ADDRESS NUMBER	MODEL	ADDRESS NUMBER
IC-761	1EH (30)	*IC-751A	1CH (28)
IC-275A/E/H	**10H (16)**	*IC-751	1CH (28)
IC-475A/E/H	14H (20)	*IC-271A/E/H	20H (32)
IC-375A	12H (18)	*IC-471A/E/H	22H (34)
IC-575A/E/H	16H (22)	*IC-1271A/E	24H (36)
IC-735	04H (4)	*IC-R71A/E/D	1AH (26)
IC-R7000	08H (8)		

*Address numbers are fixed by the UX-14.

Bracketed figures ( ) are decimals; figures marked with an H are hexadecimals.

Downloaded from www.Manualslib.com manuals search engine

Switch 8 (For setting a transceive flag):
The ON position sets a flag used for sending code data of transceive operations automatically when the frequency is changed. The receive code data is accepted regardless of whether the switch is ON or OFF.
Matrix configuration: Y7 → DB7

Switches 9 and 10 (For setting CI-V baud rate):

Baud	Switch 9	Switch 10
9600	OFF	OFF
4800	ON	OFF
1200	OFF	ON
300	ON	ON

Matrix configuration: Y6 → DB6
Y6 → DB7

NOTE:
The standard ICOM CI-V baud rate is 1200bps.

4-6 SWITCHING REGULATOR CIRCUIT (IC-275A/E ONLY)

This circuit provides 13.8V DC (8A) output.

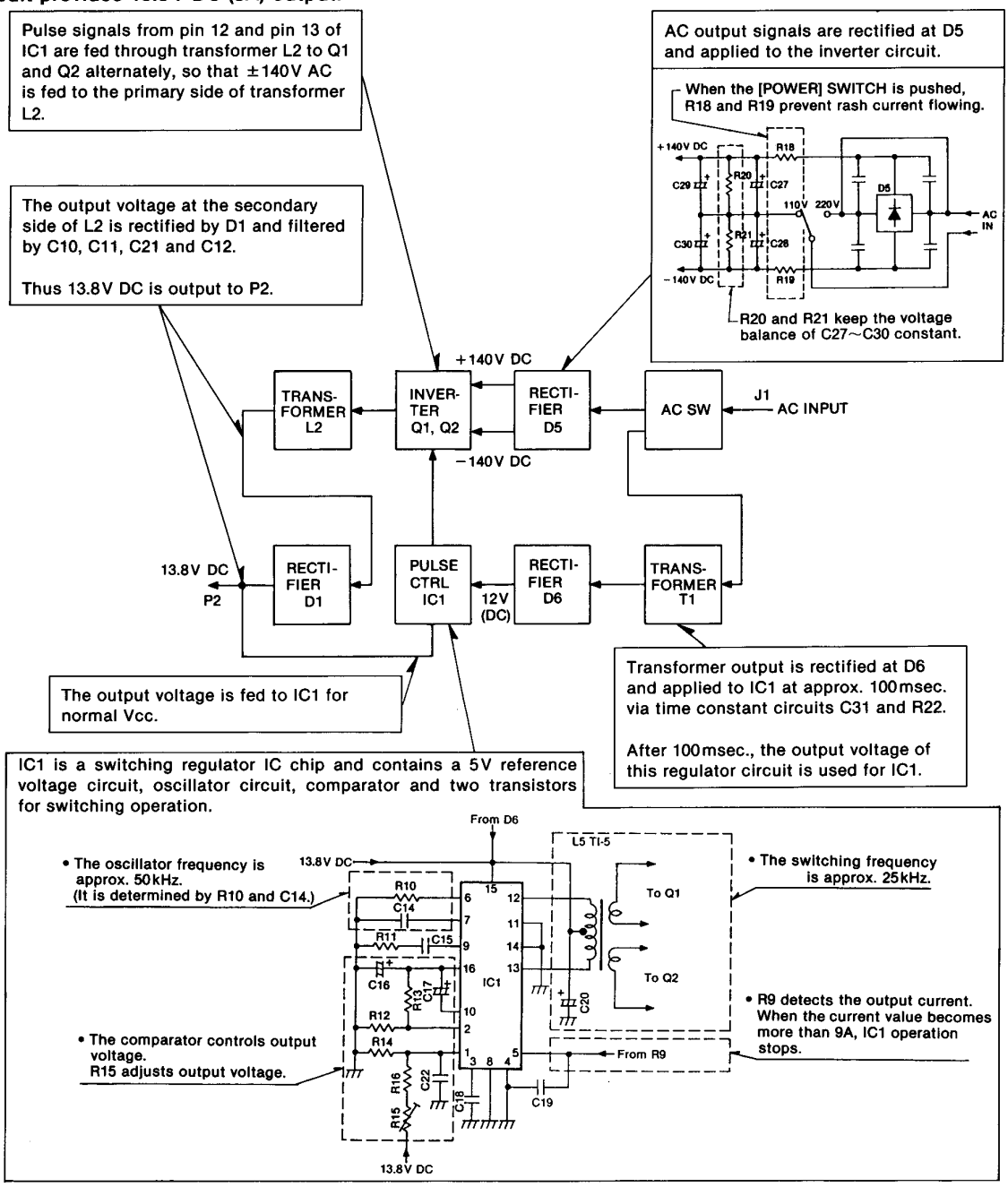

Fig. 23

Downloaded from www.Manualslib.com manuals search engine

SECTION 5 MECHANICAL PARTS AND DISASSEMBLY

5-1 FRAME DISASSEMBLY

1. Unscrew and remove the 12 screws labelled ① from the TOP COVER.
   Remove the TOP COVER.
2. Unscrew and remove the 5 screws labelled ② from the BOTTOM COVER.
   Remove the BOTTOM COVER.
3. Remove the hex socket screw labelled ③ from the TUNING CONTROL.
   Pull out the forward controls from the FRONT PANEL.
4. Unscrew and remove the 5 screws labelled ④ from the FRONT PANEL.
   Remove the FRONT PANEL.

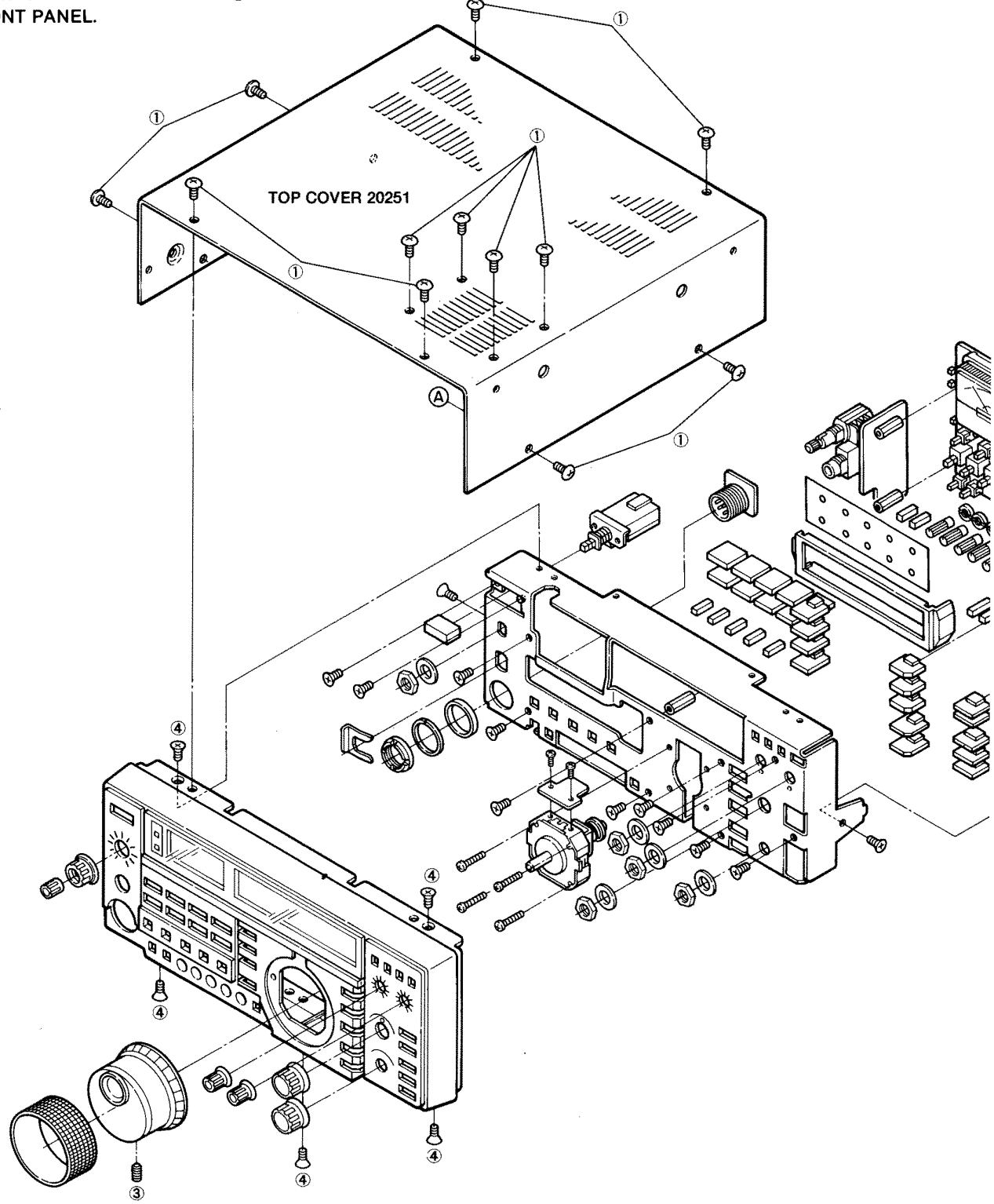

Downloaded from www.Manualslib.com manuals search engine

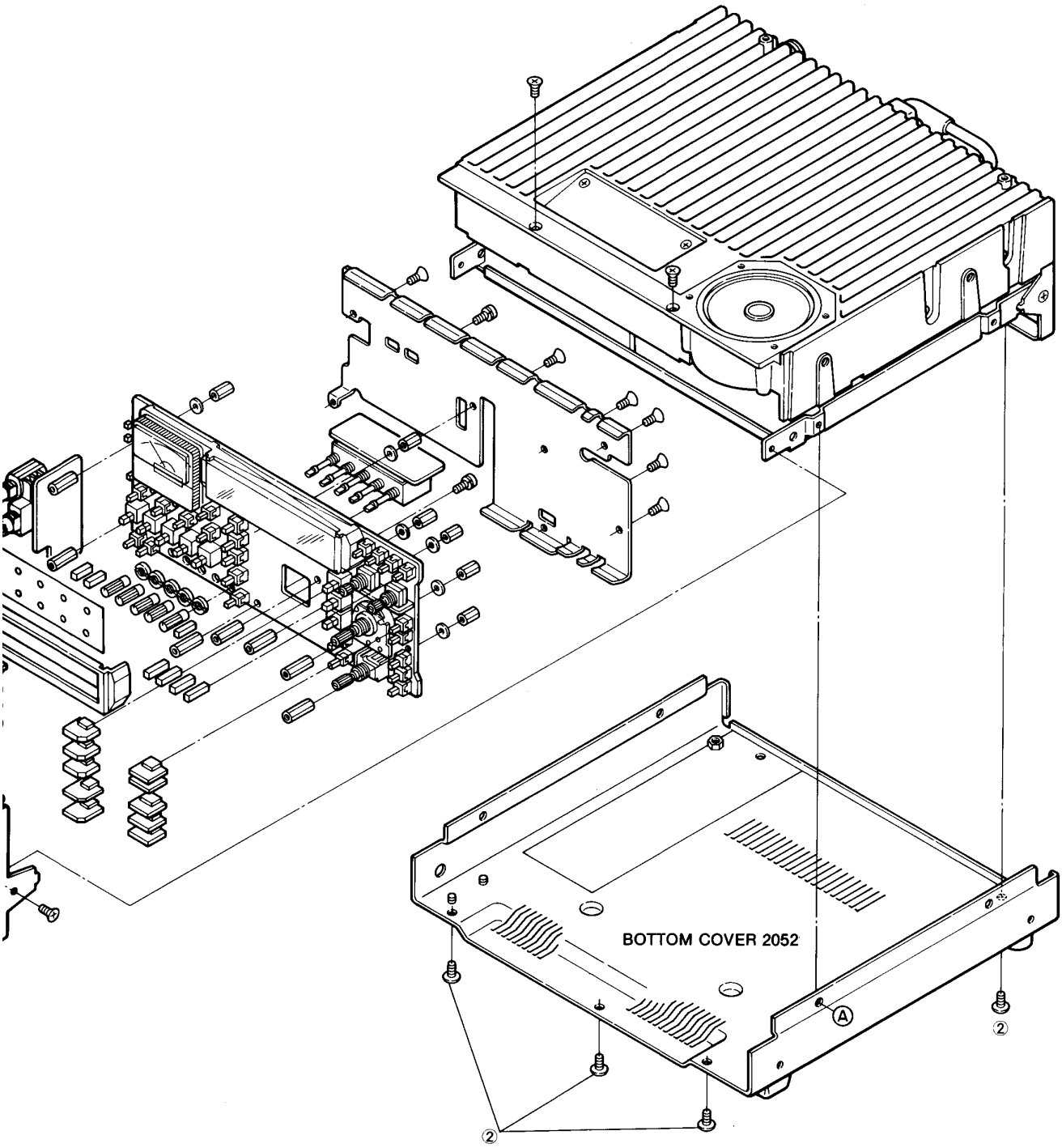

NOTE: Ⓐ indicates the location where the covers are attached.

Downloaded from www.Manualslib.com manuals search engine

5-2 FRONT PANEL DISASSEMBLY

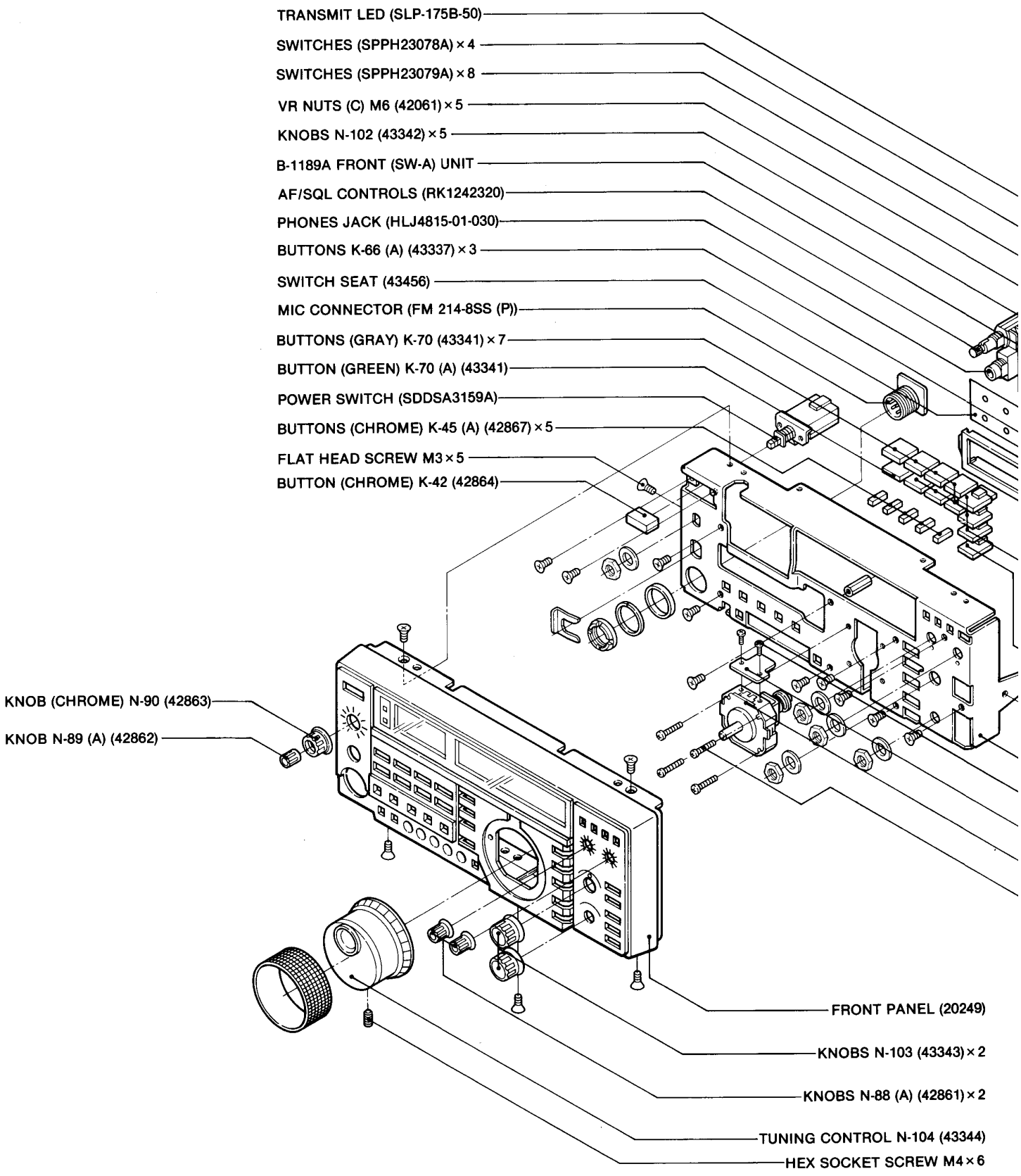

Downloaded from www.Manualslib.com manuals search engine

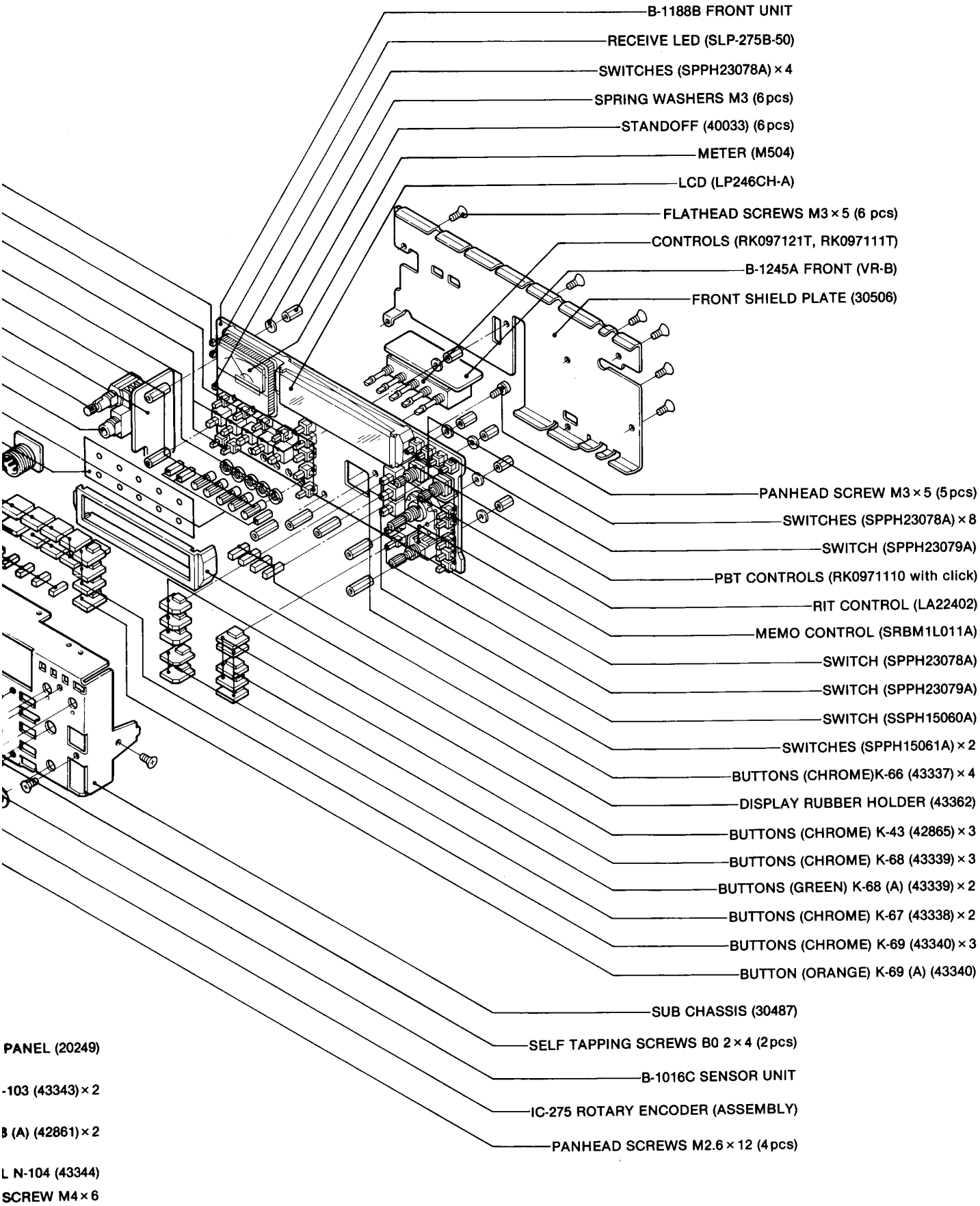

Downloaded from www.Manualslib.com manuals search engine

5-3 REAR PANEL DISASSEMBLY

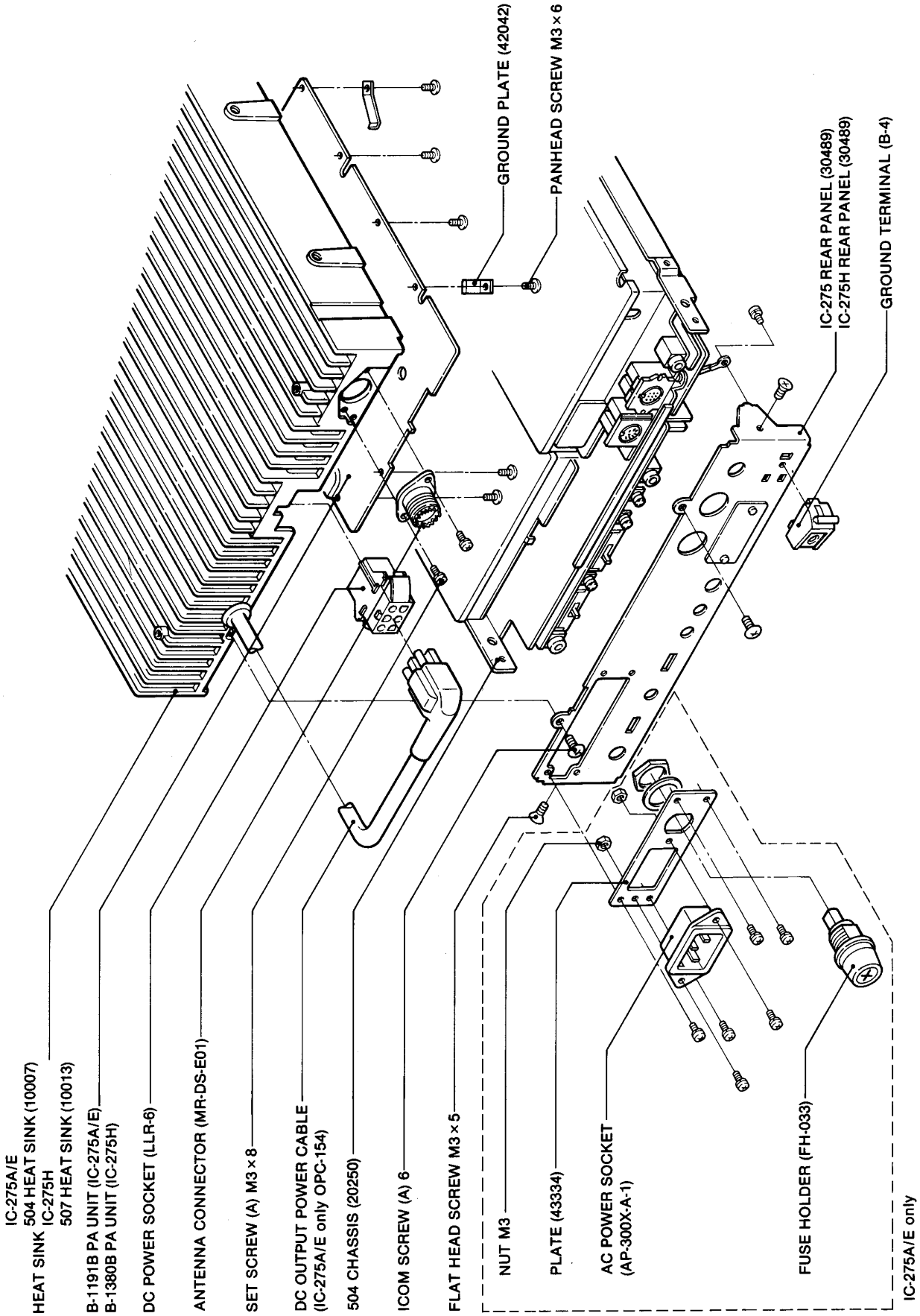

Downloaded from www.Manualslib.com manuals search engine

5-4 FRONT, LOGIC AND PLL UNITS CONNECTOR ASSEMBLY

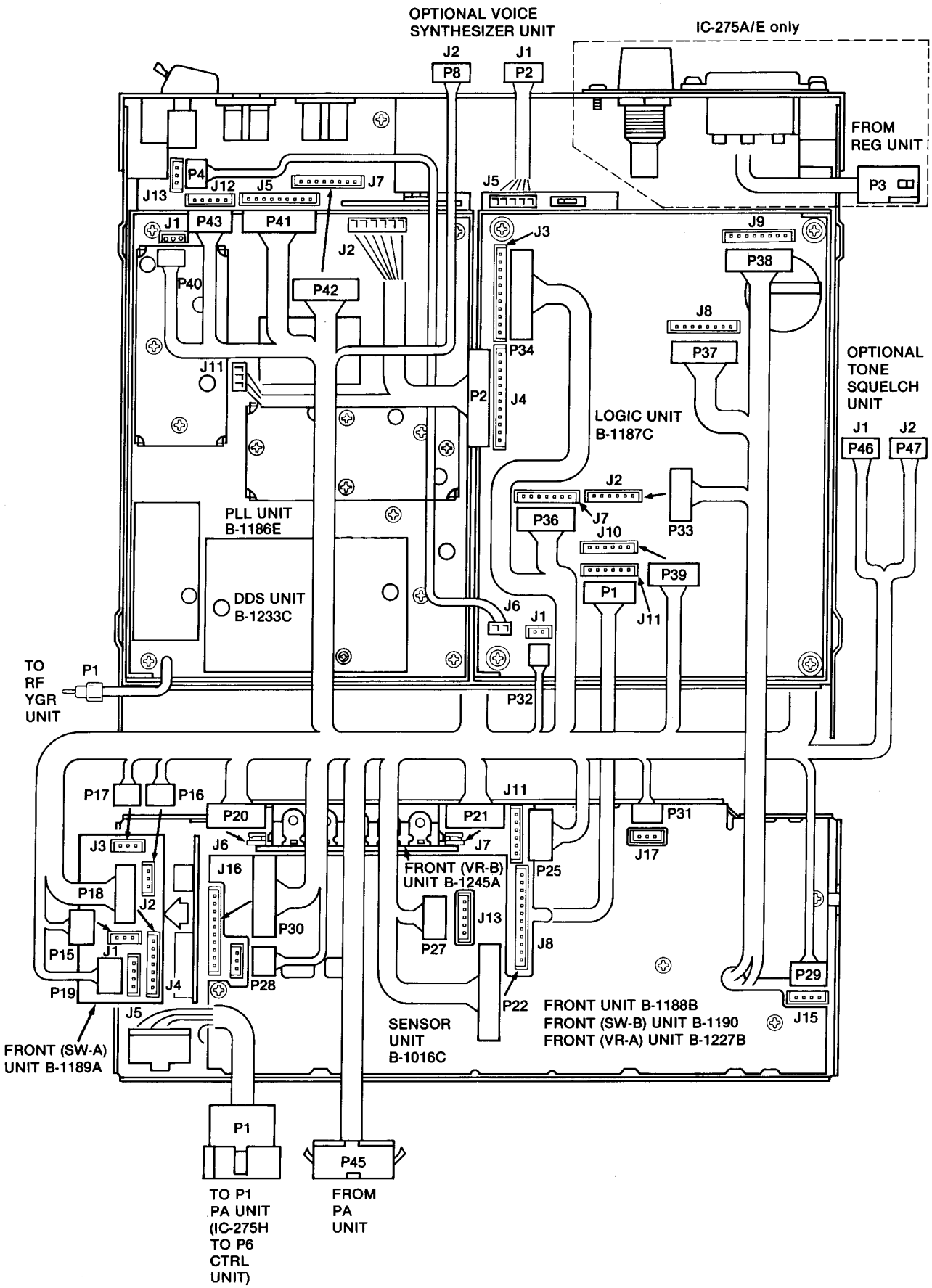

Downloaded from www.Manualslib.com manuals search engine

5-5 FRONT, MAIN AND RF YGR UNITS CONNECTOR ASSEMBLY

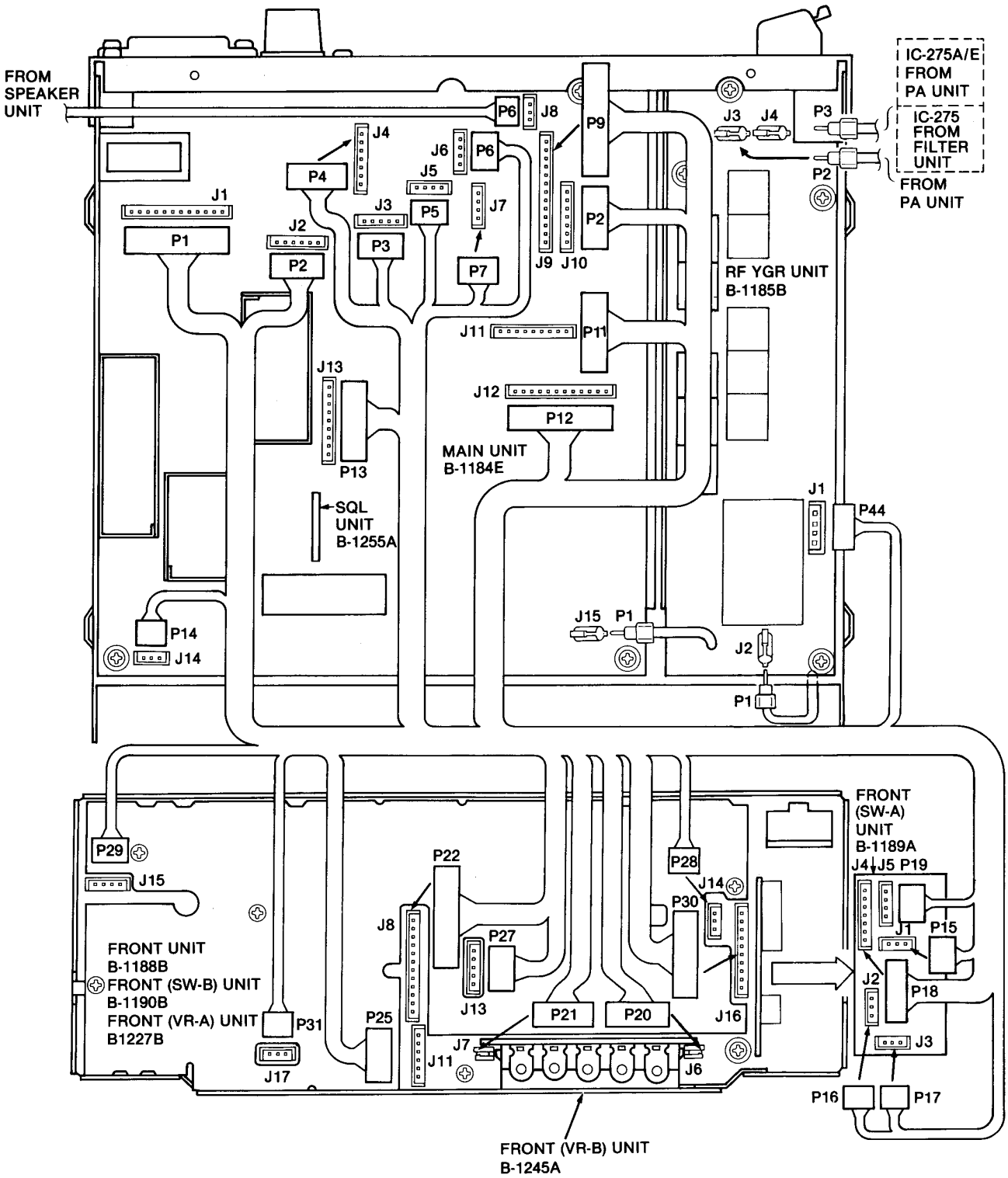

Downloaded from www.Manualslib.com manuals search engine

5-6 PA AND REG UNITS CONNECTOR ASSEMBLY (IC-275A/E)

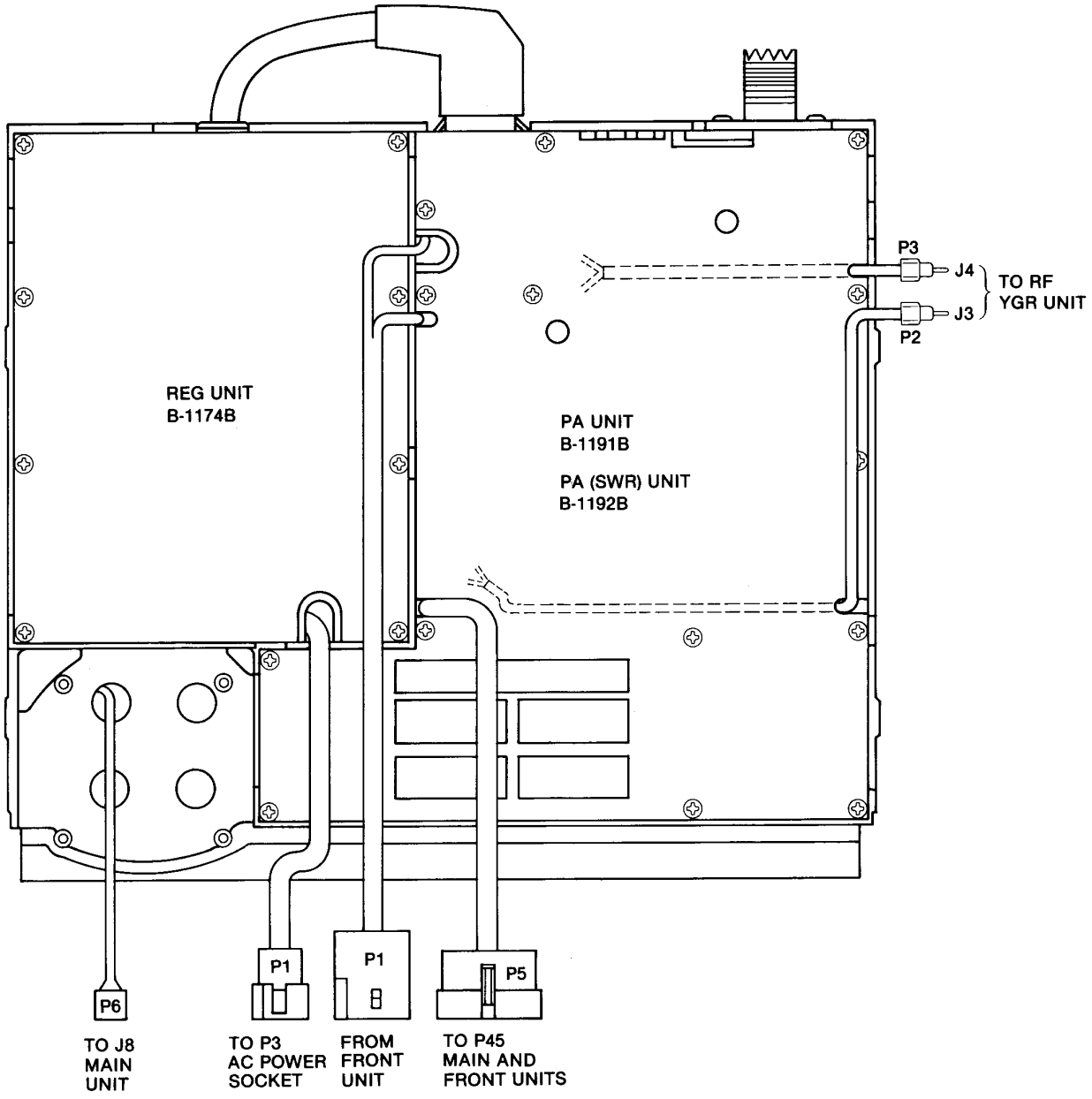

Downloaded from www.Manualslib.com manuals search engine

5-7 PA, CTRL AND FILTER UNITS CONNECTOR ASSEMBLY (IC-275H)

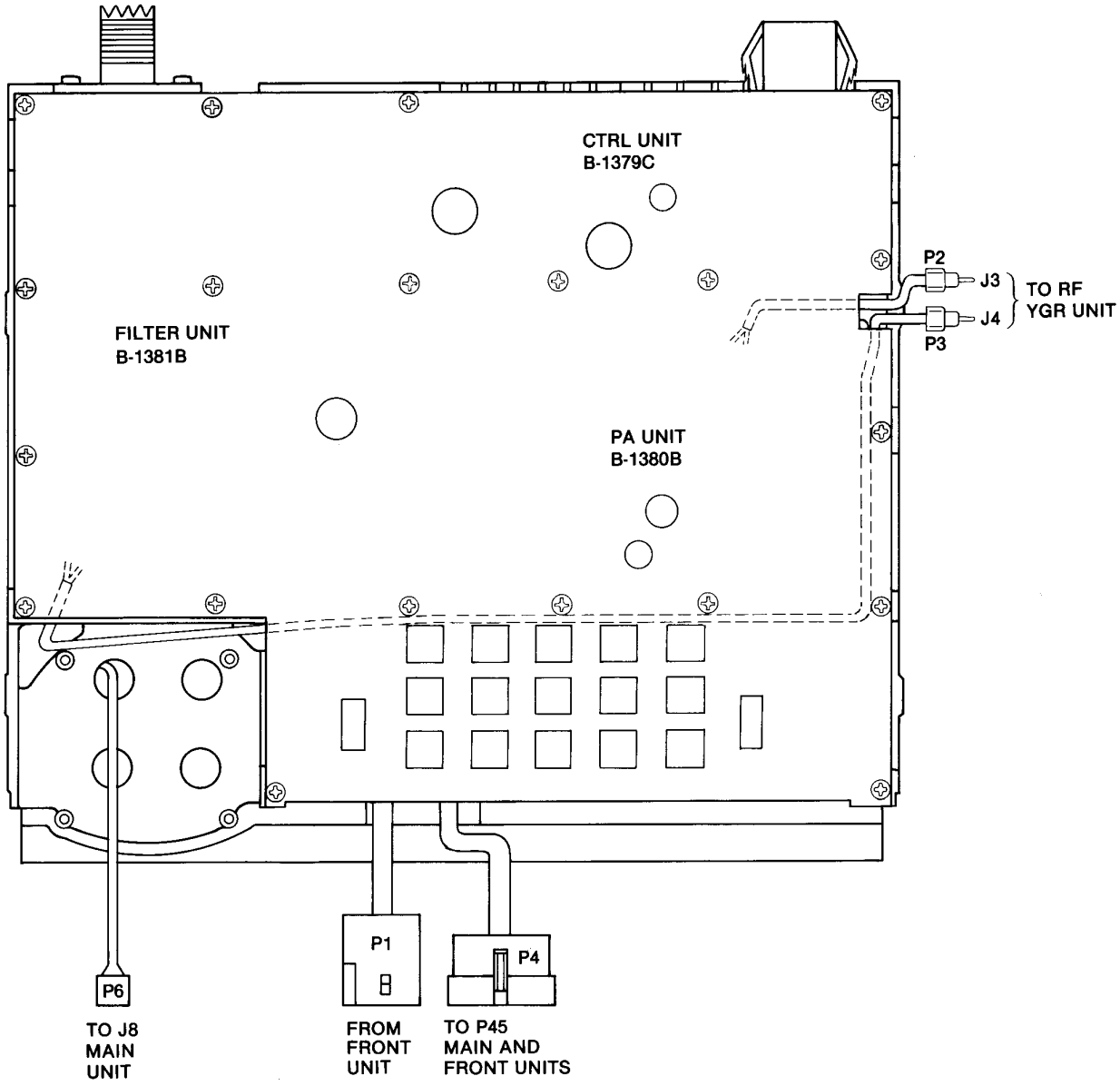

Downloaded from www.Manualslib.com manuals search engine

SECTION 6 MAINTENANCE AND ADJUSTMENT

6-1 PREPARATION BEFORE SERVICING

CAUTION: An external AC power supply should be used to connect the transceiver to a power source during testing.

1. Detach the power cord and turn OFF the POWER SWITCH before performing any work on the transceiver.

2. DO NOT turn the [PREAMP] SWITCH ON while a signal generator is connected to the ANTENNA CONNECTOR. DC voltage is generated and may damage the protector fuse of the signal generator.

3. DO NOT short circuit components while making adjustments.

4. Use an insulated tuning tool for all adjustments.

5. DO NOT force any of the variable components. Turn them slowly and smoothly.

6. Follow the instructions exactly. If an indicated result is not obtained, repeat the instruction until the correct result is obtained.

7. Check the condition of connectors, solder joints and screws when adjustments are complete. Make sure components DO NOT touch each other.

8. Confirm defective operation of the transceiver first when checking an out-of-service unit. Verify that external sources DO NOT cause the problem.

9. Use the correct tools and test equipment.

10. Remove the transceiver case as shown in SECTION 5-1.

11. For transmission problems, attach a dummy load to the ANTENNA CONNECTOR. For reception problems, attach an antenna or signal generator to the ANTENNA CONNECTOR. DO NOT transmit into the signal generator.

12. Recheck for the suspected malfunction with the POWER SWITCH ON.

13. Check the defective circuit. Measure the DC voltages of the collector, base and emitter of each transistor.

Downloaded from www.Manualslib.com manuals search engine

6-2 PLL ADJUSTMENT

TEST INSTRUMENTS REQUIRED	MEASUREMENT CONNECTION LOCATION
(1) AC POWER SUPPLY • Output voltage : 13.8V DC • Current capacity : 25A or more (2) FREQUENCY COUNTER • Frequency range : 0.1~180MHz • Frequency accuracy : ±1ppm or better • Sensitivity : 100mV or better (3) RF VOLTMETER • Frequency range : 0.1~180MHz • Measuring range : 0.01~10V (4) DC VOLTMETER • Input impedance : 50kΩ/DC or better	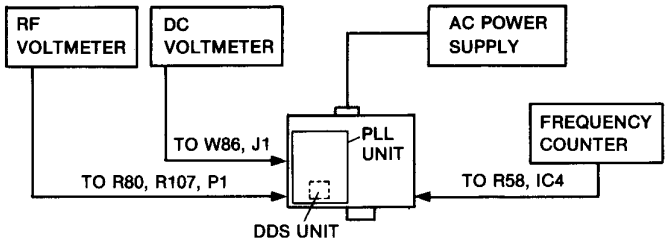

ADJUSTMENT		ADJUSTMENT CONDITIONS	MEASUREMENT		VALUE	ADJUSTMENT POINT	
			UNIT	LOCATION		UNIT	ADJUST
REFERENCE FREQUENCY	1	• Frequency display: 145.0000MHz • Receive mode	PLL	Connect a frequency counter to R58.	30.7200MHz	PLL	L22
MULTIPLIER OUTPUT LEVEL	1	• Frequency display: 145.0000MHz • Receive mode	PLL	Connect an RF voltmeter to R80.	Adjust to maximum output. (approx. 400mVp-p, approx. 141mVrms)	PLL	L24, L25
DDS CLOCK	1	• Frequency display: 145.0000MHz • Receive mode	DDS	Connect a frequency counter to IC4, pin 11.	5.24288MHz	DDS	C1
LPL LOCK VOLTAGE	1	• Frequency display: 144.4800MHz • FM mode	PLL	Connect a DC voltmeter to W86.	1V	PLL	C121
	2	• Frequency display: 144.4790MHz • FM mode			approx. 2V		Verify
SUB LOOP OUTPUT VOLTAGE	1	• Frequency display: 145.0000MHz • Receive mode	PLL	Connect an RF voltmeter to C180 side of R107.	Adjust to maximum output. (approx. 1Vp-p, approx. 0.35Vrms)	PLL	L31
HPL LOCK VOLTAGE (HAM BAND)	1	• Frequency display: 144.0000MHz • FM mode	PLL	Connect a DC voltmeter to J1, pin 3.	3V	PLL	C16
(WIDE BAND)	2	• Frequency display: 138.0000MHz • FM mode			2.2V		L51
VCO OUTPUT LEVEL	1	• Frequency display: 145.0000MHz • FM mode	PLL	Terminate P1 to ground with a 50Ω resistor. Connect an RF voltmeter to P1.	Adjust to maximum output. (0dBm or more)	PLL	L6
		NOTE: After completing the adjustment, return P1 to its original condition.					

Downloaded from www.Manualslib.com manuals search engine

PLL AND DDS UNITS

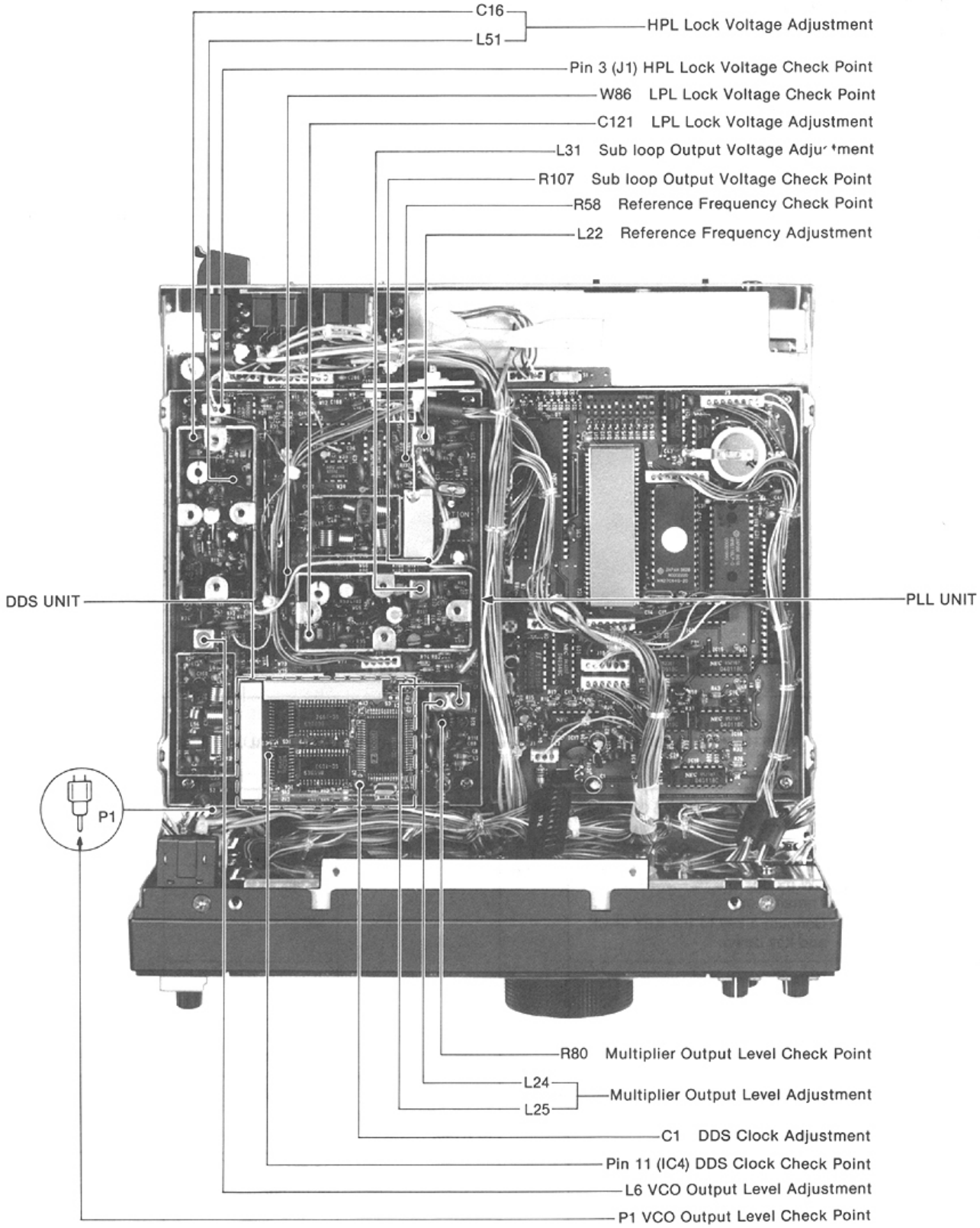

This picture shows the IC-275H model.

Downloaded from www.Manualslib.com manuals search engine

6-3 FREQUENCY AND TONE ADJUSTMENT

TEST INSTRUMENTS REQUIRED	MEASUREMENT CONNECTION LOCATION
(1) AC POWER SUPPLY • Output voltage : 13.8V DC • Current capacity : 25A or more (2) FREQUENCY COUNTER • Frequency range : 0.1~180MHz • Frequency accuracy : ±1ppm or better • Sensitivity : 100mV or better (3) AF GENERATOR (AG) • Frequency range : 200~3000Hz • Output level : 0~300mV (4) AC MILLI-VOLTMETER • Measuring range : 2~50mV (5) FM DEVIATION METER • Frequency minimum : 150MHz • Measuring range : 0~±5kHz	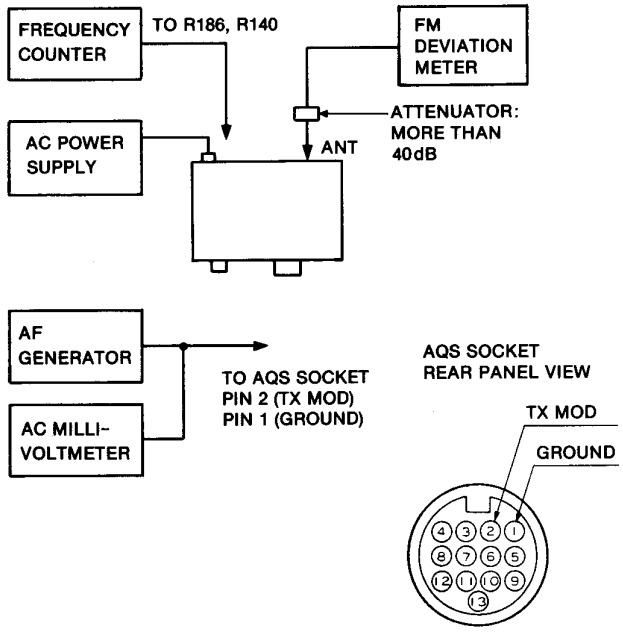

ADJUSTMENT		ADJUSTMENT CONDITIONS	MEASUREMENT		VALUE	ADJUSTMENT POINT	
			UNIT	LOCATION		UNIT	ADJUST
BFO FREQUENCY	1	• Frequency display: 145.0000MHz • LSB mode • Receive mode	MAIN	Connect a frequency counter to R186.	10.75150MHz	MAIN	C119
	2	• CW mode • Transmit mode • Connect a key to the KEY JACK and key down.			10.74910MHz		L31
	3	• USB mode • Receive mode			10.74850MHz		L30
	4	• CW mode • Receive mode			10.74830MHz (±150Hz)		Verify
PBT FREQUENCY	1	• USB mode • PBT CONTROL: Center position • Receive mode	MAIN	Connect a frequency counter to R140.	10.29500MHz	MAIN	L28
	2	• PBT CONTROL: Max. CW			10.29670MHz or higher		Verify
	3	• PBT CONTROL: Max. CCW			10.29330MHz or lower		
	4	• PBT CONTROL: Center position • FM mode			10.29500MHz		R310

CW: Clockwise CCW: Counterclockwise

Downloaded from www.Manualslib.com manuals search engine

MAIN UNIT

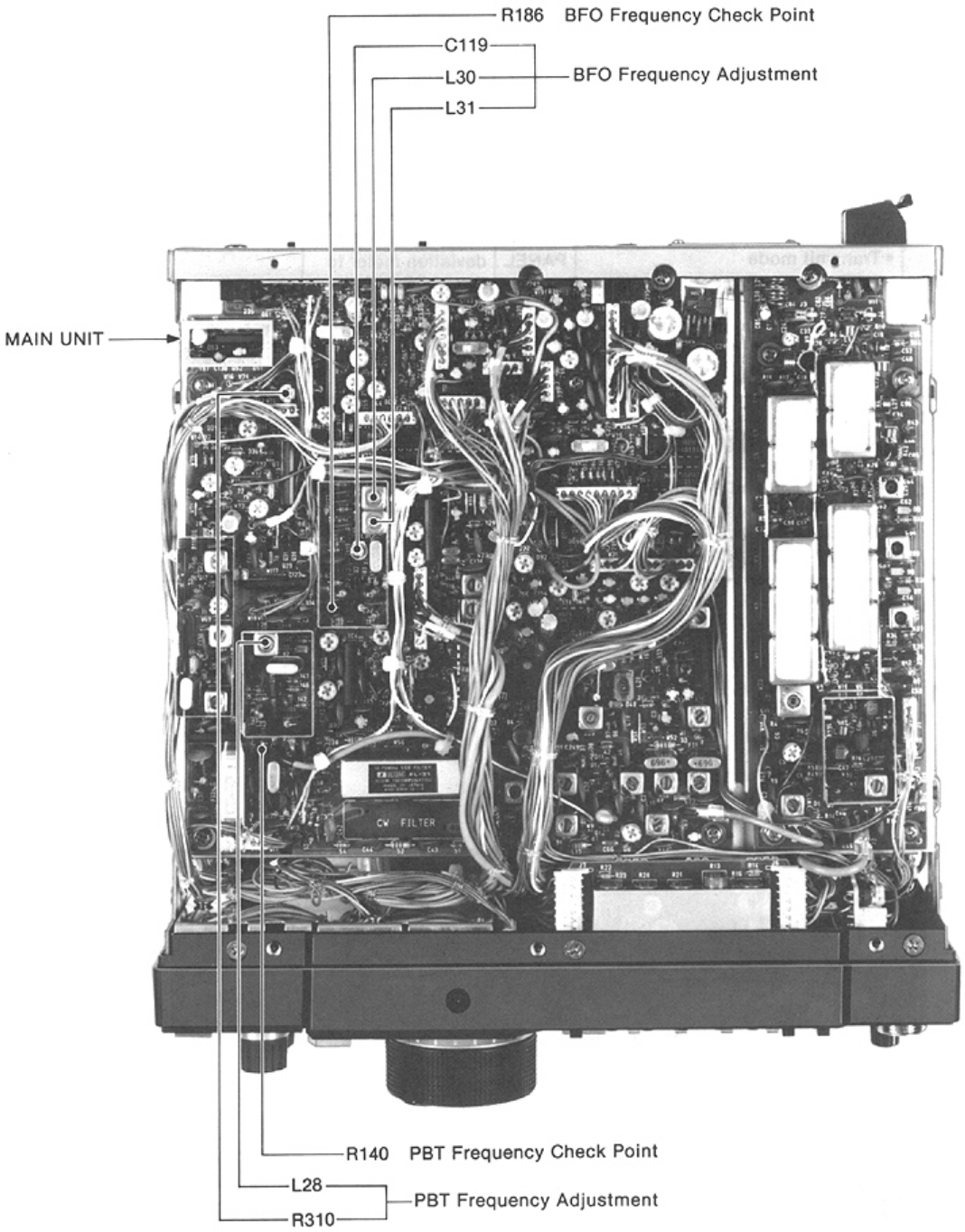

This picture shows the IC-275H model.

Downloaded from www.Manualslib.com manuals search engine

FREQUENCY AND TONE ADJUSTMENT (CONTINUED)

ADJUSTMENT		ADJUSTMENT CONDITIONS	MEASUREMENT		VALUE	ADJUSTMENT POINT	
			UNIT	LOCATION		UNIT	ADJUST
SUBAUDIBLE TONE	1	• Frequency display: 145.0000 MHz • FM mode • Transmit mode • Apply no AF signal to the MIC CONNECTOR. • TONE SWITCH: ON • TONE FREQUENCY: 67.0 Hz	REAR PANEL	Connect an FM deviation meter to the ANTENNA CONNECTOR through an attenuator.	Dev.: ±0.5 kHz (#08A, #10A, #03H, #04H) Dev.: ±3.5 kHz (#06E, #02H)	LOGIC	R4
AQS TONE	1	• FM mode • Transmit mode • Apply no AF signal to the MIC CONNECTOR. • Apply an AF signal to the AQS SOCKET, pin 2: 1.2 kHz, 300 mV (pin 1 is ground).	REAR PANEL	Connect an FM deviation meter to the ANTENNA CONNECTOR through an attenuator.	Dev.: ±4 kHz	MAIN	R152
TONE SQUELCH	1	• FM mode • Apply no AF signal to the MIC CONNECTOR. • Connect P46 and P47 to UT-34 (option). • TONE SQUELCH SWITCH: ON • TONE FREQUENCY: 67.0 Hz	REAR PANEL	Connect an FM deviation meter to the ANTENNA CONNECTOR through an attenuator.	Dev.: ±0.5 kHz	MAIN	R151

LOGIC UNIT

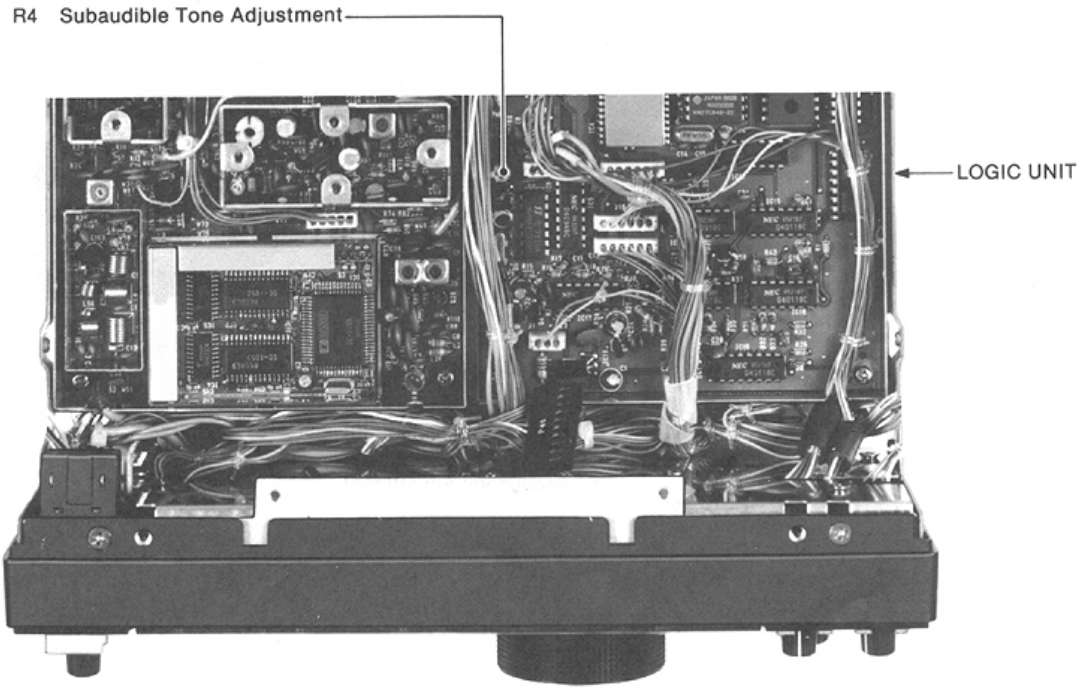

This picture shows the IC-275H model.

Downloaded from www.Manualslib.com manuals search engine

MAIN UNIT

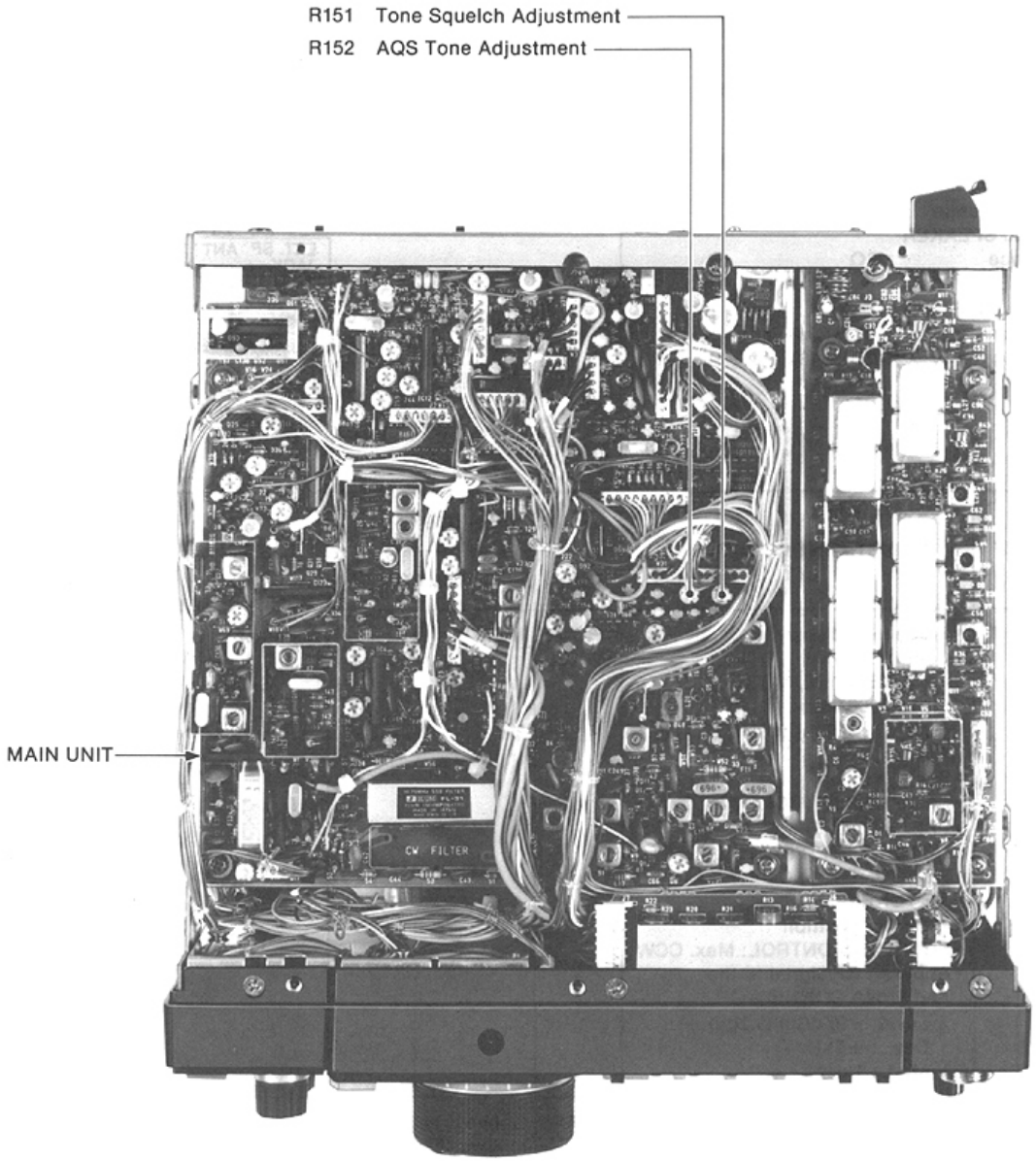

This picture shows the IC-275H model.

Downloaded from www.Manualslib.com manuals search engine

6-4 RECEIVER ADJUSTMENT

TEST INSTRUMENTS REQUIRED	MEASUREMENT CONNECTION LOCATION
(1) AC POWER SUPPLY • Output voltage : 13.8V DC • Current capacity : 25A or more (2) STANDARD SIGNAL GENERATOR (SSG) • Frequency range : 0.1~180MHz • Output level : −127~−17dBm (0.1μV~32mV) (3) DC VOLTMETER • Input impedance : 50kΩ/DC or better (4) AC MILLI-VOLTMETER • Measuring range : 10mV~10V (5) EXTERNAL SPEAKER • Impedance : 8Ω (6) OHM METER (7) OSCILLOSCOPE • Frequency range : DC~20MHz • Measuring range : 0.01~10V	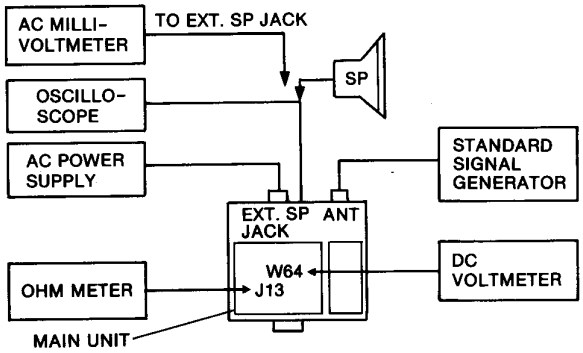

ADJUSTMENT		ADJUSTMENT CONDITIONS	MEASUREMENT		VALUE	ADJUSTMENT POINT	
			UNIT	LOCATION		UNIT	ADJUST
FM RECEIVER	1	• Frequency display: 145.0000MHz (#06E, #12E, #02H, #05H) 146.0000MHz (#08A, #10A, #03H, #04H) • FM mode • Receive mode • RF GAIN CONTROL: Max. CW • PREAMP: OFF • NOTCH FILTER SWITCH: OFF • PBT CONTROL: Center position • AF TONE CONTROL: Center position • SQUELCH CONTROL: Max. CCW • Apply an RF signal to the ANTENNA CONNECTOR. Level: −97dBm (3.2μV) Dev. : ±5kHz Mod. : 1kHz	FRONT PANEL	METER	Maximum	RF YGR MAIN	L11 L6, L7, L8, L9, L10
SSB RECEIVER	1	• USB mode • Apply an RF signal to the ANTENNA CONNECTOR. Level: −127dBm (0.1μV) Mod. : OFF	REAR PANEL	Connect an AC milli-voltmeter with an 8Ω load to the EXT. SP JACK.	Max. audio output	MAIN	L12, L13, L14,
TOTAL GAIN	1	• USB mode • Apply an RF signal to the ANTENNA CONNECTOR. Level: −127dBm (0.1μV) Mod. : OFF	REAR PANEL	Connect an AC milli-voltmeter with an 8Ω load to the EXT. SP JACK.	Max. audio output	FRONT PANEL	TUNING CONTROL
	2	• Apply an RF signal to the ANTENNA CONNECTOR. Level: −97dBm (3.2μV) Mod. : OFF • Apply no signal to the ANTENNA CONNECTOR.			20dB S/N ratio	MAIN	R72

CW: Clockwise CCW: Counterclockwise

Downloaded from www.Manualslib.com manuals search engine

MAIN AND RF YGR UNITS

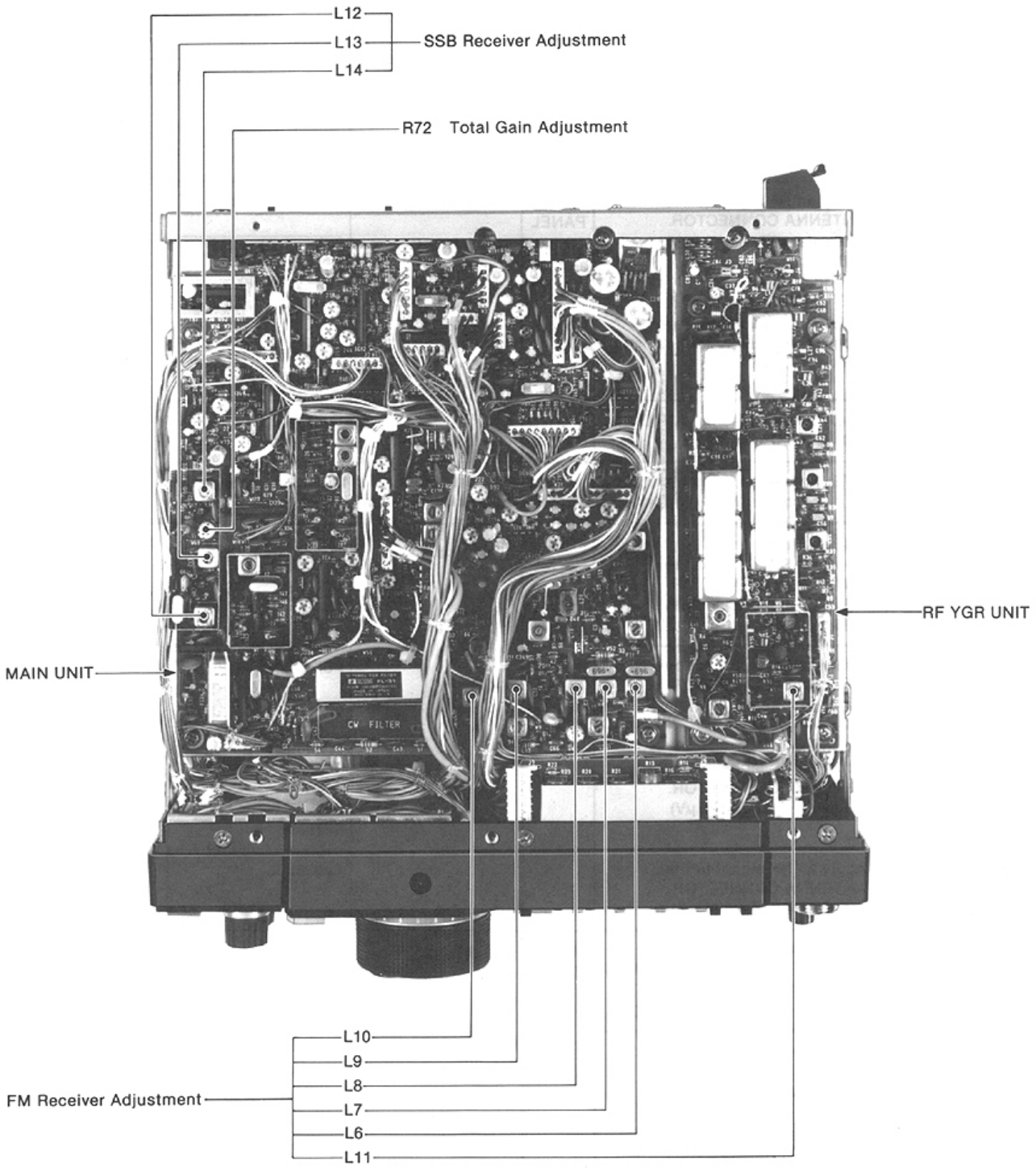

This picture shows the IC-275H model.

Downloaded from www.Manualslib.com manuals search engine

RECEIVER ADJUSTMENT (CONTINUED)

ADJUSTMENT		ADJUSTMENT CONDITIONS	MEASUREMENT		VALUE	ADJUSTMENT POINT	
			UNIT	LOCATION		UNIT	ADJUST
CENTER METER	1	• FM mode • Apply an RF signal to the ANTENNA CONNECTOR. Level: −77dBm (32μV) Mod.: OFF	MAIN	Connect a DC voltmeter to W64.	3V	MAIN	L23
	2	• Apply an RF signal to the ANTENNA CONNECTOR. Level: −97dBm (3.2μV) Dev.: ±3.5kHz Mod.: 1kHz • METER SWITCH: C • ALC • Adjust the applied frequency (approx. +4kHz) to the maximum meter value.	FRONT PANEL	METER	80% of full scale 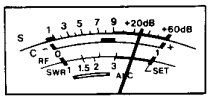		R121
	3	• Apply no signal to the ANTENNA CONNECTOR.			Center		R120
		NOTE: Repeat adjustments 1 through 3 several times. Verify that the meter movement becomes 20%~80% when the applied frequency changes.					
S-METER	1	• USB mode • Apply an RF signal to the ANTENNA CONNECTOR. Level: −97dBm (3.2μV) Mod.: OFF	FRONT PANEL	METER	S9 (S-scale)	MAIN	R24
	2	• Apply an RF signal to the ANTENNA CONNECTOR. Level: −47dBm (1mV)			Full scale		R14
	3	• FM mode • Apply an RF signal to the ANTENNA CONNECTOR. Level: −107dBm (1μV)			Maximum (S-scale)		L36
	4				S5 (S-scale)		R221
	5	• Apply an RF signal to the ANTENNA CONNECTOR. Level: −67dBm (0.1mV)			Full scale		R222
RF GAIN	1	• USB mode • Apply no signal to the ANTENNA CONNECTOR. • RF GAIN CONTROL: Max. CCW	FRONT PANEL	METER	Full scale	MAIN	R29
	2	• FM mode • Apply an RF signal to the ANTENNA CONNECTOR. Level: −77dBm (32μV) Dev.: ±3.5kHz Mod.: 1kHz • RF GAIN CONTROL: Max. CCW			S9 (S-scale)		R31
SQUELCH UNIT	1	• FM mode • Apply an RF signal to the ANTENNA CONNECTOR. Level: −125dBm (0.13μV) Mod.: OFF	MAIN	Connect an ohm meter between J13, pin 9 and ground.	0Ω	MAIN	R323
	2	• Apply no signal to the ANTENNA CONNECTOR.			∞		Verify

CCW: Counterclockwise

Downloaded from www.Manualslib.com manuals search engine

MAIN UNIT

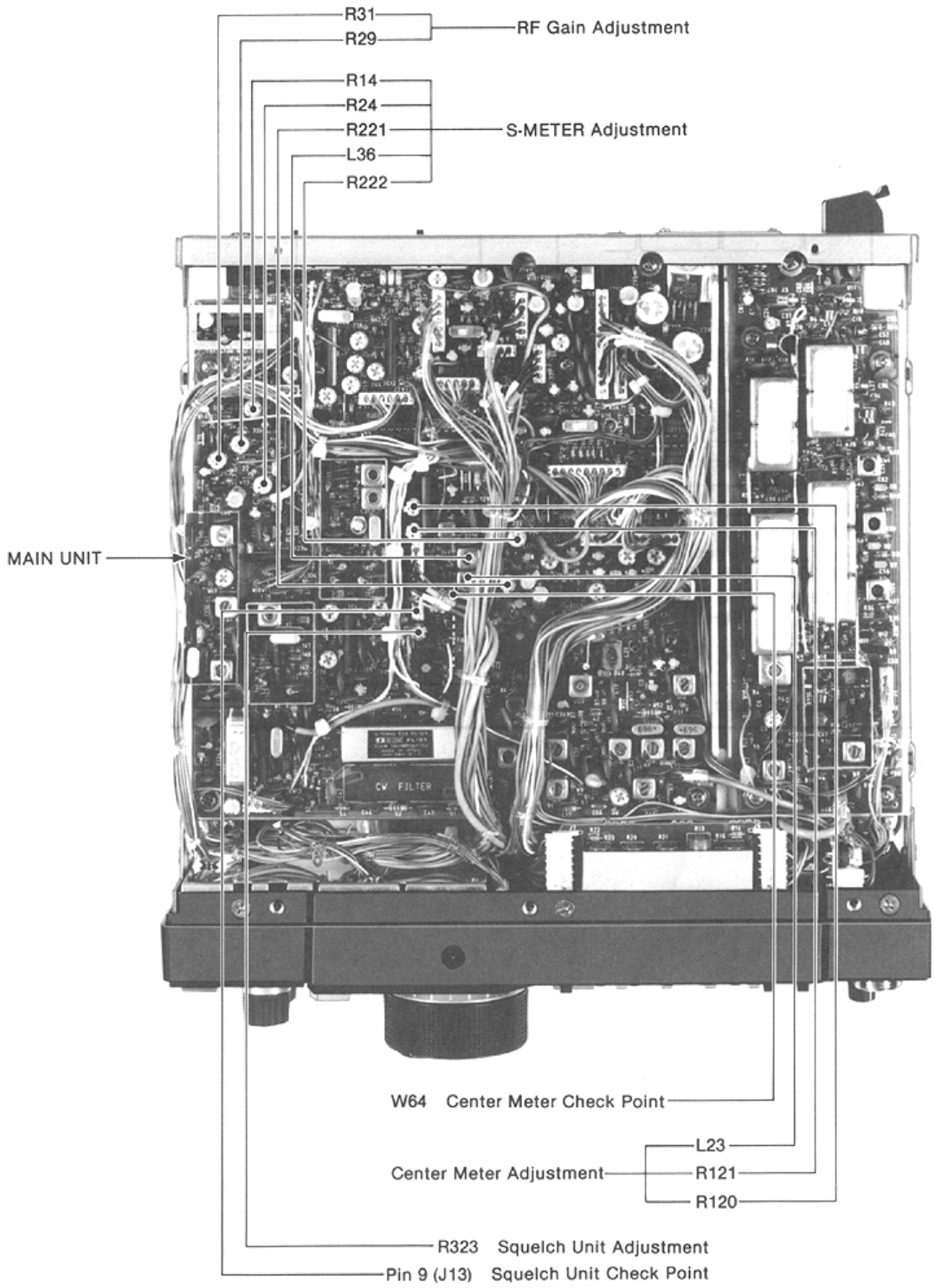

This picture shows the IC-275H model.

Downloaded from www.Manualslib.com manuals search engine

RECEIVER ADJUSTMENT (CONTINUED)

ADJUSTMENT		ADJUSTMENT CONDITIONS	MEASUREMENT		VALUE	ADJUSTMENT POINT	
			UNIT	LOCATION		UNIT	ADJUST
NOISE BALANKER	1	• USB mode • Apply an RF signal including the following pulse-type noise to the ANTENNA CONNECTOR. 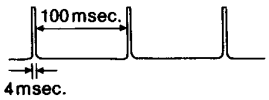 	REAR PANEL	Connect an oscilloscope with an 8Ω load to the EXT. SP JACK.	Adjust to minimum waveform on the oscilloscope.	MAIN	L1, L2
BEEP	1	• Push any switch which activates the beep sound.	TOP COVER	Speaker	Verify that the level of beep sound is adjustable.	MAIN	R348
		NOTE: Set R348 to center position after verification.					
WIDE BAND	1	• Frequency display: 143.0000 MHz • FM mode • Apply an RF signal to the ANTENNA CONNECTOR. Level: −97 dBm (3.2 μV) Dev. : ±3.5 kHz Mod. : 1 kHz	FRONT PANEL	METER	Maximum	RF YGR	L25, L24, L23
		NOTE: Repeat adjustment 1 several times.					

Downloaded from www.Manualslib.com manuals search engine

MAIN AND RF YGR UNITS

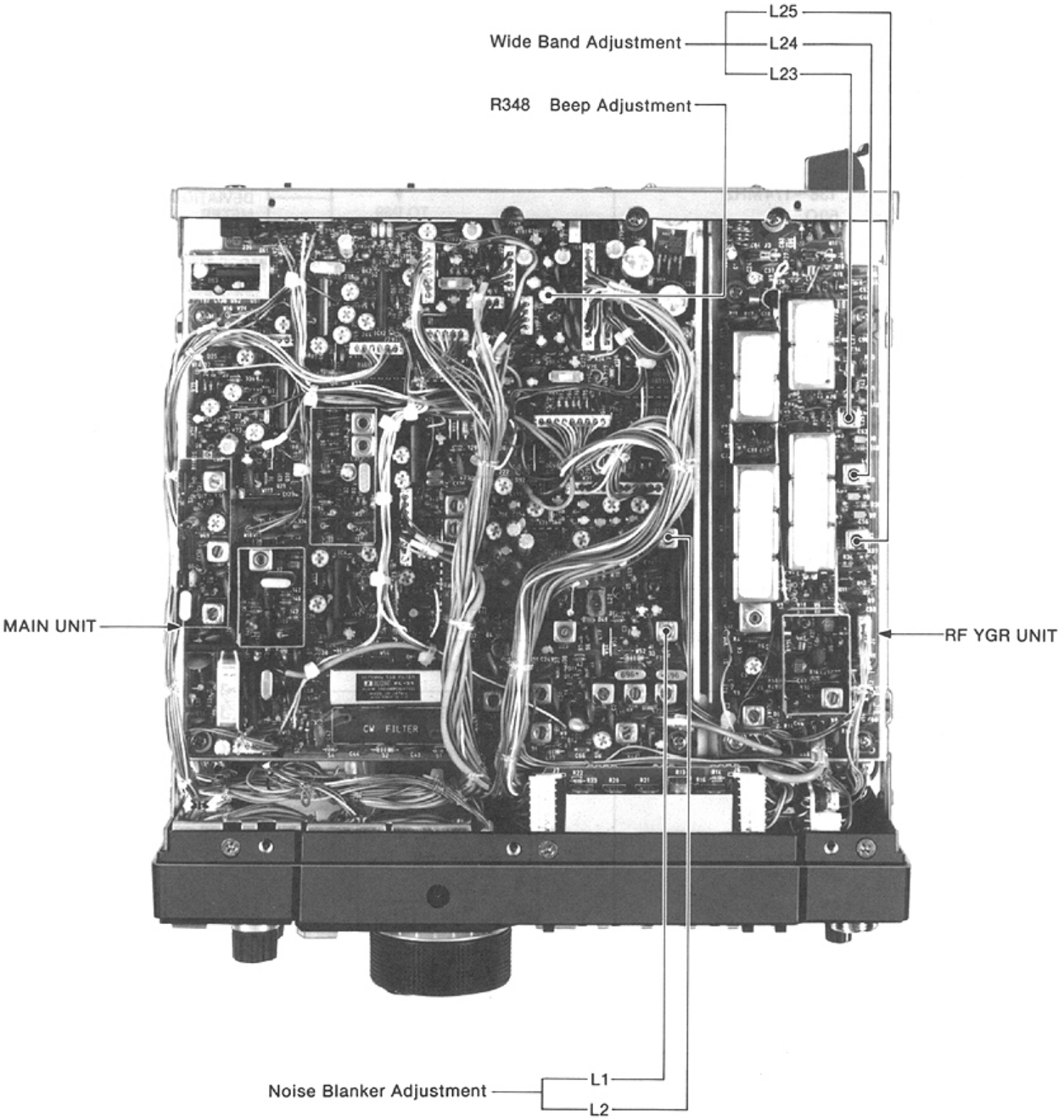

This picture shows the IC-275H model.

Downloaded from www.Manualslib.com manuals search engine

6-5 TRANSMITTER ADJUSTMENT (IC-275H)

TEST INSTRUMENTS REQUIRED	MEASUREMENT CONNECTION LOCATION
(1) AC POWER SUPPLY • Output voltage : 13.8V DC • Current capacity : 25A or more (2) FREQUENCY COUNTER • Frequency range : 0.1~180MHz • Frequency accuracy : ±1ppm or better • Sensitivity : 100mV or better (3) RF POWER METER (TERMINATED TYPE) • Measuring range : 10~200W • Frequency range : 138~174MHz • Impedance : 50Ω • SWR : Less than 1:1.2 (4) AMMETER • Measurement capability : 1A and 30A (5) AF GENERATOR (AG) • Frequency range : 200~2000Hz • Output level : 0~50mV (6) AC MILLI-VOLTMETER • Measuring range : 2~50mV (7) FM DEVIATION METER • Frequency minimum : 150MHz • Measuring range : 0~±5kHz (8) SPECTRUM ANALYZER	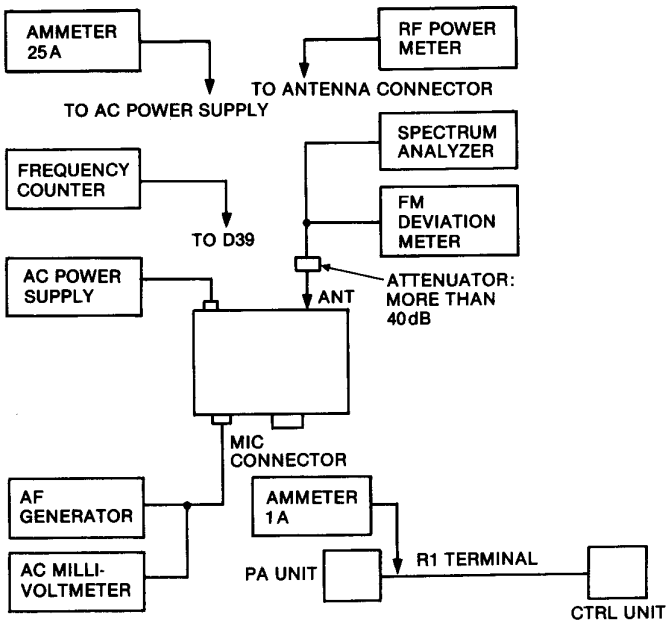

ADJUSTMENT		ADJUSTMENT CONDITIONS	MEASUREMENT		VALUE	ADJUSTMENT POINT	
			UNIT	LOCATION		UNIT	ADJUST
IDLING CURRENT	1	• USB mode • Transmit mode • MIC GAIN CONTROL: Max. CCW	PA	Desolder R1 (CTRL) and connect an ammeter between R1 and L9 (PA). 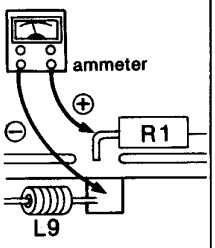	500mA	PA	R4
		NOTE: Resolder after making adjustment.					
FM FREQUENCY	1	• FM mode • Transmit mode • R105 (MAIN): Max. CW	MAIN	Connect a frequency counter to the cathode of D39.	10.7500MHz	MAIN	L19
FM OUTPUT POWER ⓐ FM TX AMP	1	• Frequency display: 145.0000MHz (#02H, #05H) 146.0000MHz (#03H, #04H) • FM mode • Transmit mode • S5 Power Selector Switch: High • RF POWER CONTROL: Max. CW • R244 (MAIN): Max. CW • R259 (MAIN): Max. CCW	REAR PANEL	Connect an RF power meter to the ANTENNA CONNECTOR. Connect an ammeter between the AC power supply and IC-275H.	Adjust to maximum output.	MAIN RF YGR PA	L16, R82 L15, R105 L1, C24 C12
	2				Less than 25A		Verify

CW: Clockwise CCW: Counterclockwise

Downloaded from www.Manualslib.com manuals search engine

MAIN AND RF YGR UNITS

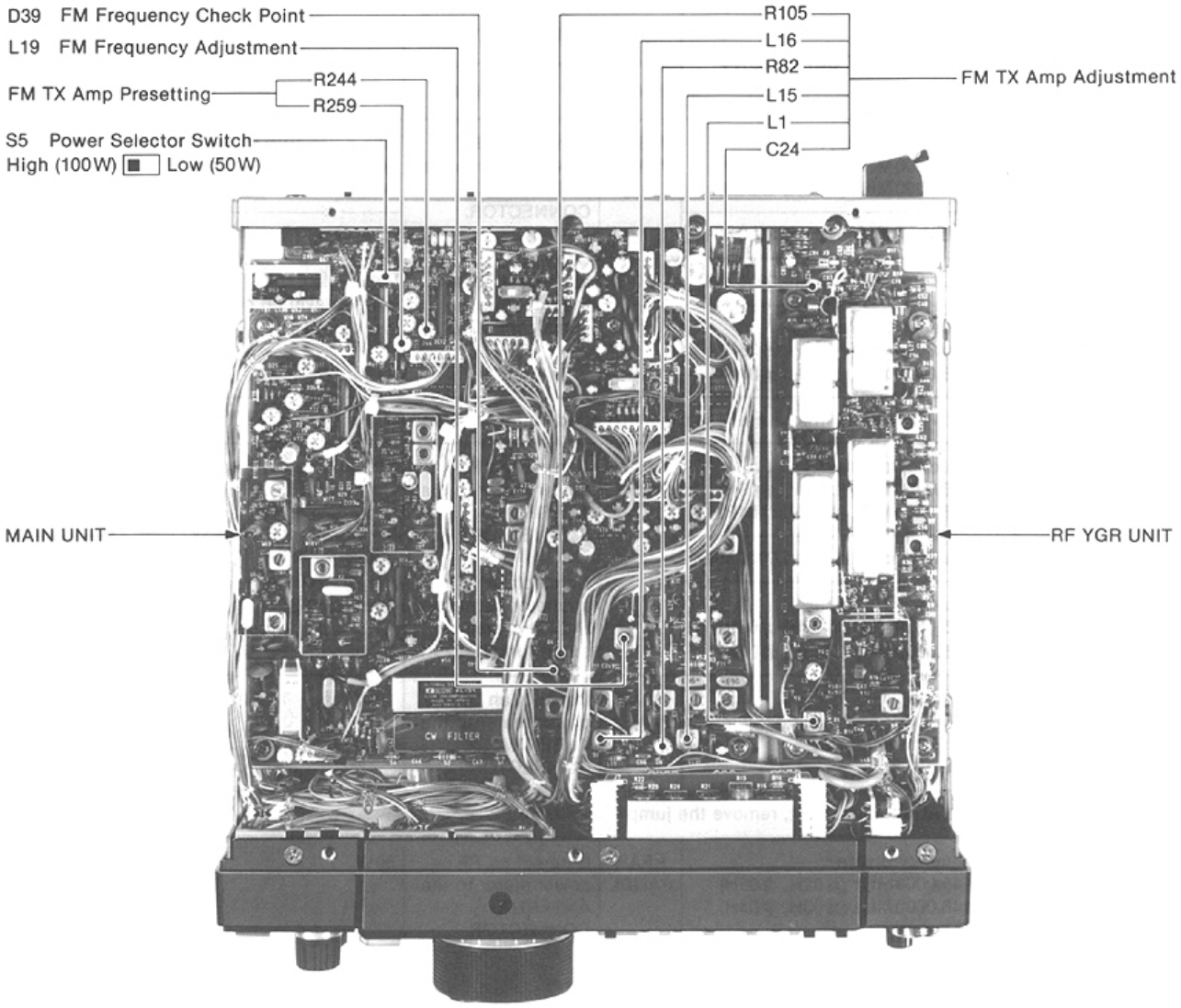

PA AND CTRL UNITS

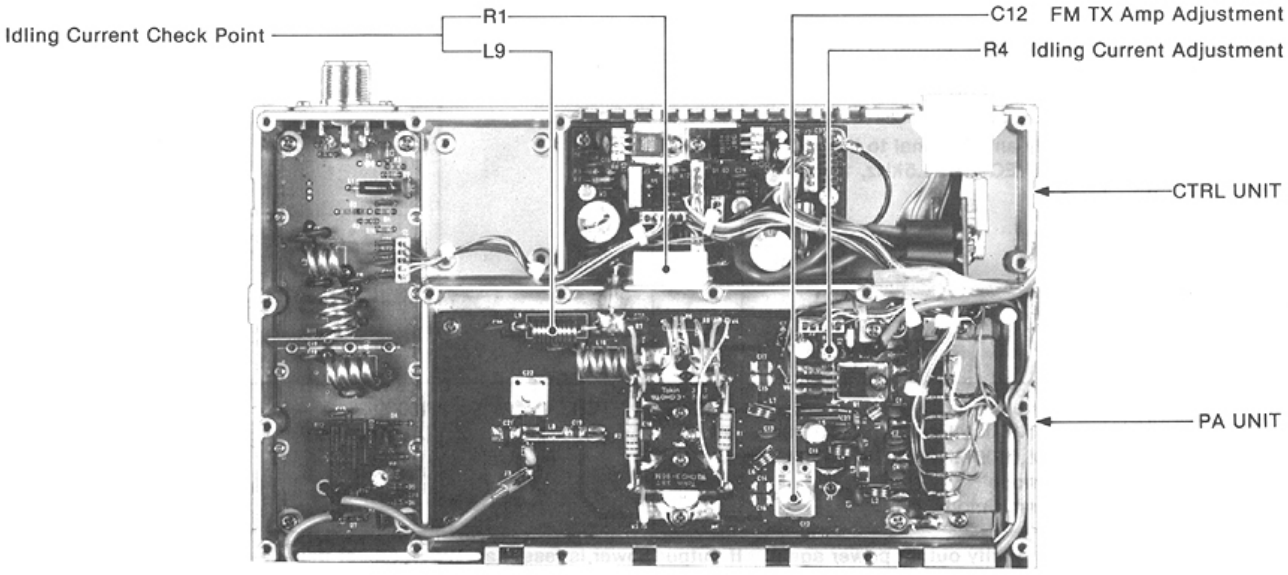

These pictures show the IC-275H model.

Downloaded from www.Manualslib.com manuals search engine

TRANSMITTER ADJUSTMENT (IC-275H) (CONTINUED)

ADJUSTMENT		ADJUSTMENT CONDITIONS	MEASUREMENT		VALUE	ADJUSTMENT POINT	
			UNIT	LOCATION		UNIT	ADJUST
FM OUTPUT POWER ⓑ POWER BALANCE	2	• Frequency display: 145.0000 MHz (#02H, #05H) 146.0000 MHz (#03H, #04H)	REAR PANEL	Connect an RF power meter to the ANTENNA CONNECTOR. Connect an ammeter between the AC power supply and IC-275H.	The point 10W down from maximum output.	MAIN	R259
	3	• Frequency display: 144.0000 MHz			20A		R244
	4	• Frequency display: 144.0000 MHz • Frequency display: 146.0000 MHz (#02H, #05H) 148.0000 MHz (#03H, #04H)			Adjust to same output level on both band edges.	PA	C22
ⓒ POWER SET	5	NOTE: Verify the currents are less than 19A at adjustments 5 and 6.					
		• Frequency display: 146.0000 MHz (#02H, #05H) 148.0000 MHz (#03H, #04H)	REAR PANEL	Connect an RF power meter to the ANTENNA CONNECTOR. Connect an ammeter between the AC power supply and IC-275H.	100W	MAIN	R259
	6	• Frequency display: 144.0000 MHz			100W		R244
	7	• Frequency display: 145.0000 MHz (#02H, #05H) 146.0000 MHz (#03H, #04H)			100W ± 10%		Verify
HIGH TEMPERA-TURE PROTECTOR	1	• FM mode • S2 (PA): Connect a jumper wire to both terminals of S2. • Transmit mode	REAR PANEL	Connect an RF power meter to the ANTENNA CONNECTOR.	50W	CTRL	R10
		NOTE: After adjustment, remove the jumper wire from S2.					
SSB OUTPUT POWER	1	• Frequency display: 145.0000 MHz (#02H, #05H) 146.0000 MHz (#03H, #04H) • USB mode • Transmit mode • MIC TONE CONTROL: Center position • MIC GAIN CONTROL: Center position • Apply an AF signal to the MIC CONNECTOR: 1.5kHz, 2mV.	REAR PANEL	Connect an RF power meter to the ANTENNA CONNECTOR.	50W	MAIN	R82
(BALANCE)	2	• Apply an AF signal to the MIC CONNECTOR: 300Hz, 2mV. • USB and LSB modes			Adjust to same output level on both modes.	MAIN	C119
(ALC)	3	• Apply an AF signal to the MIC CONNECTOR: 1.5kHz, 10mV.	FRONT PANEL	METER	100% (ALC scale)	MAIN	R265
FM DRIVE LEVEL	1	• Frequency display: 145.0000 MHz (#02H, #05H) 146.0000 MHz (#03H, #04H) • FM mode • Transmit mode	FRONT PANEL	METER	100% (ALC scale)	MAIN	R105
		NOTE: Verify output power again. If output power is less than 100W, adjust item ⓒ POWER SET again.					

Downloaded from www.Manualslib.com manuals search engine

MAIN UNIT

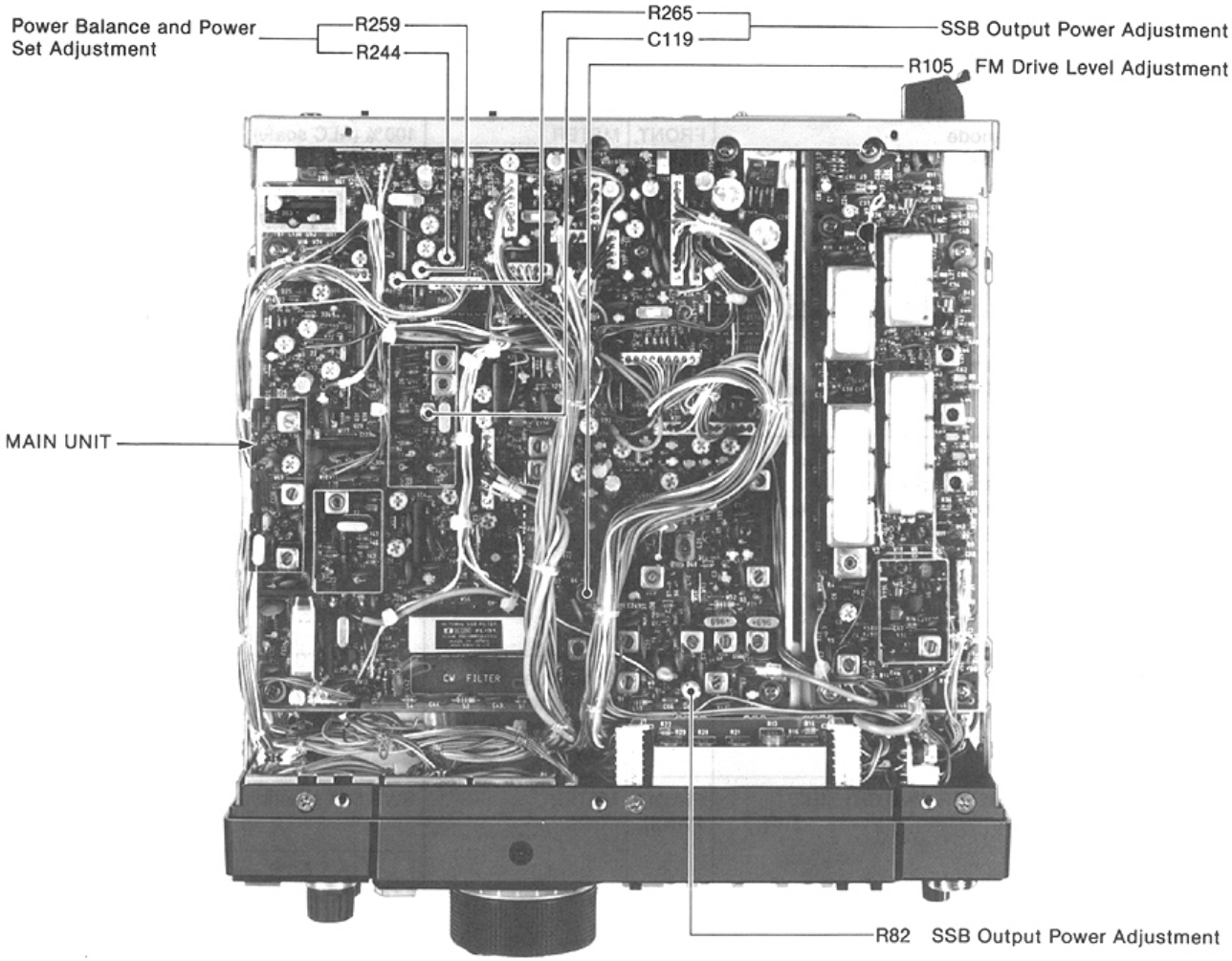

PA AND CTRL UNITS

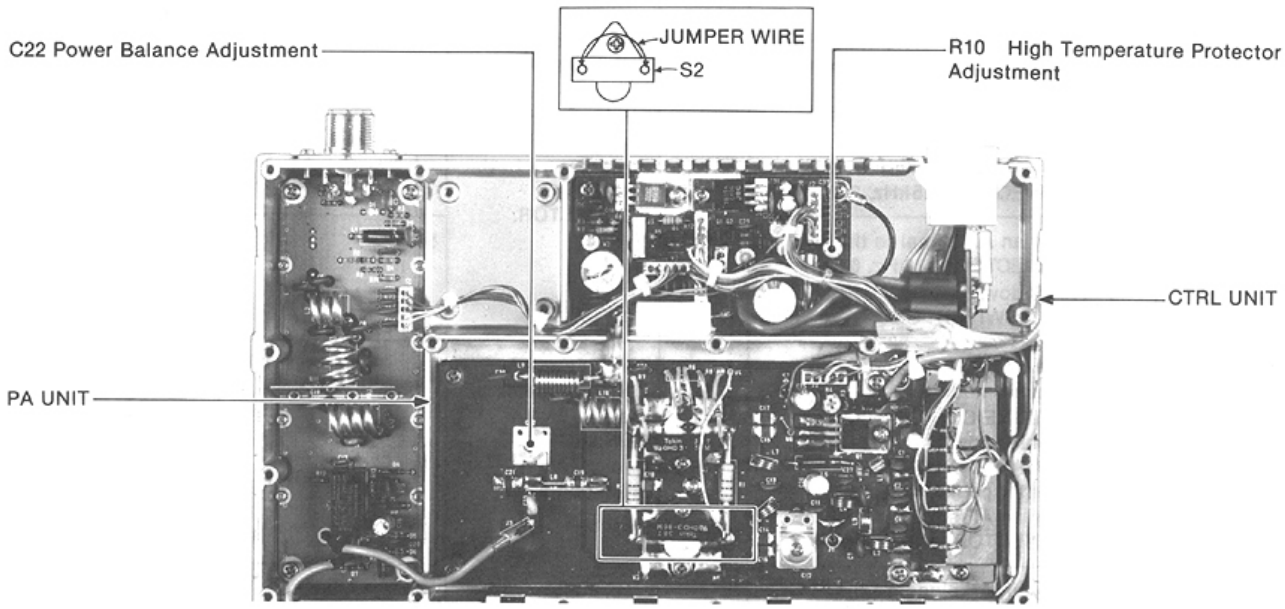

These pictures show the IC-275H model.

Downloaded from www.Manualslib.com manuals search engine

TRANSMITTER ADJUSTMENT (IC-275H) (CONTINUED)

ADJUSTMENT		ADJUSTMENT CONDITIONS	MEASUREMENT		VALUE	ADJUSTMENT POINT	
			UNIT	LOCATION		UNIT	ADJUST
CW DRIVE LEVEL	1	• CW mode • Transmit mode • Connect a key to the KEY JACK and key down. • METER SWITCH: C • ALC	FRONT PANEL	METER	100% (ALC scale)	MAIN	R137
OUTPUT POWER (LOW)	1	• FM mode • Transmit mode • RF POWER CONTROL: Max. CCW	REAR PANEL	Connect an RF power meter to the ANTENNA CONNECTOR.	10W	MAIN	R256
RF METER (RF)	1	• FM mode • Transmit mode • RF POWER CONTROL: Max. CW • METER SWITCH: S • RF • TX-METER SWITCH: RF	FRONT PANEL	METER	90% (RF scale)	MAIN	R257
(SET)	2	• FM mode • Transmit mode	REAR PANEL	Connect an RF power meter to the ANTENNA CONNECTOR.	25W	FRONT PANEL	RF POWER CONTROL
	3	• TX-METER SWITCH: SET	FRONT PANEL	METER	SWR SET position	MAIN	R240
(SWR)	4	• TX-METER SWITCH: SWR	FRONT PANEL	METER	Less than 1.2 (SWR scale)		Verify
SWR APC	1	• FM mode • Transmit mode • RF POWER CONTROL:Max. CW • Remove any connection from the ANTENNA CONNECTOR.	REAR PANEL	Connect an ammeter between the AC power supply and IC-275H.	10A	MAIN	R250
COMP LEVEL	1	• USB mode • Apply an AF signal to the MIC CONNECTOR: 1.5kHz, 20mV.	REAR PANEL	Connect an RF power meter to the ANTENNA CONNECTOR.	50W	FRONT PANEL	MIC GAIN CONTROL
	2	• Apply an AF signal to the MIC CONNECTOR: 1.5kHz, 6.3mV. (10dB down) • COMP SWITCH: ON			50W	REAR PANEL	COMP LEVEL
FM DEVIATION	1	• FM mode • Transmit mode • MIC TONE CONTROL: Center position • MIC GAIN CONTROL: Center position • Apply an AF signal to the MIC CONNECTOR: 1kHz, 20mV.	REAR PANEL	Connect an FM deviation meter to the ANTENNA CONNECTOR through an attenuator.	Dev.: ±4.8kHz	MAIN	R162
	2	• Apply an AF signal to the MIC CONNECTOR: 1kHz, 2mV.			Dev.: ±3.5kHz		R173

Downloaded from www.Manualslib.com manuals search engine

TRANSMITTER ADJUSTMENT (IC-275H) (CONTINUED)

ADJUSTMENT		ADJUSTMENT CONDITIONS	MEASUREMENT		VALUE	ADJUSTMENT POINT	
			UNIT	LOCATION		UNIT	ADJUST
TRANSMIT SPURIOUS LEVEL	1	• Frequency display: 144.0000 MHz • FM mode • Apply no AF signal to the MIC CONNECTOR. • RF POWER CONTROL: Max. CW • S5 Power Selector Switch: High • Transmit mode	REAR PANEL	Connect a spectrum analyzer to the ANTENNA CONNECTOR through an attenuator.	Minimum spurious level of carrier frequency ±10.75 MHz.	RF YGR	L2, R3
		NOTE: Repeat adjustment 1 several times.					
CARRIER SUPPRES-SION	1	• USB mode • Apply no AF signal to the MIC CONNECTOR. • Transmit mode • Select USB and LSB mode alternately.	REAR PANEL	Connect a spectrum analyzer to the ANTENNA CONNECTOR through an attenuator.	Minimum carrier level (Less than −40 dB) Same carrier level (USB and LSB mode)	MAIN	R133, R135

CW: Clockwise CCW: Counterclockwise

MAIN AND RF YGR UNITS

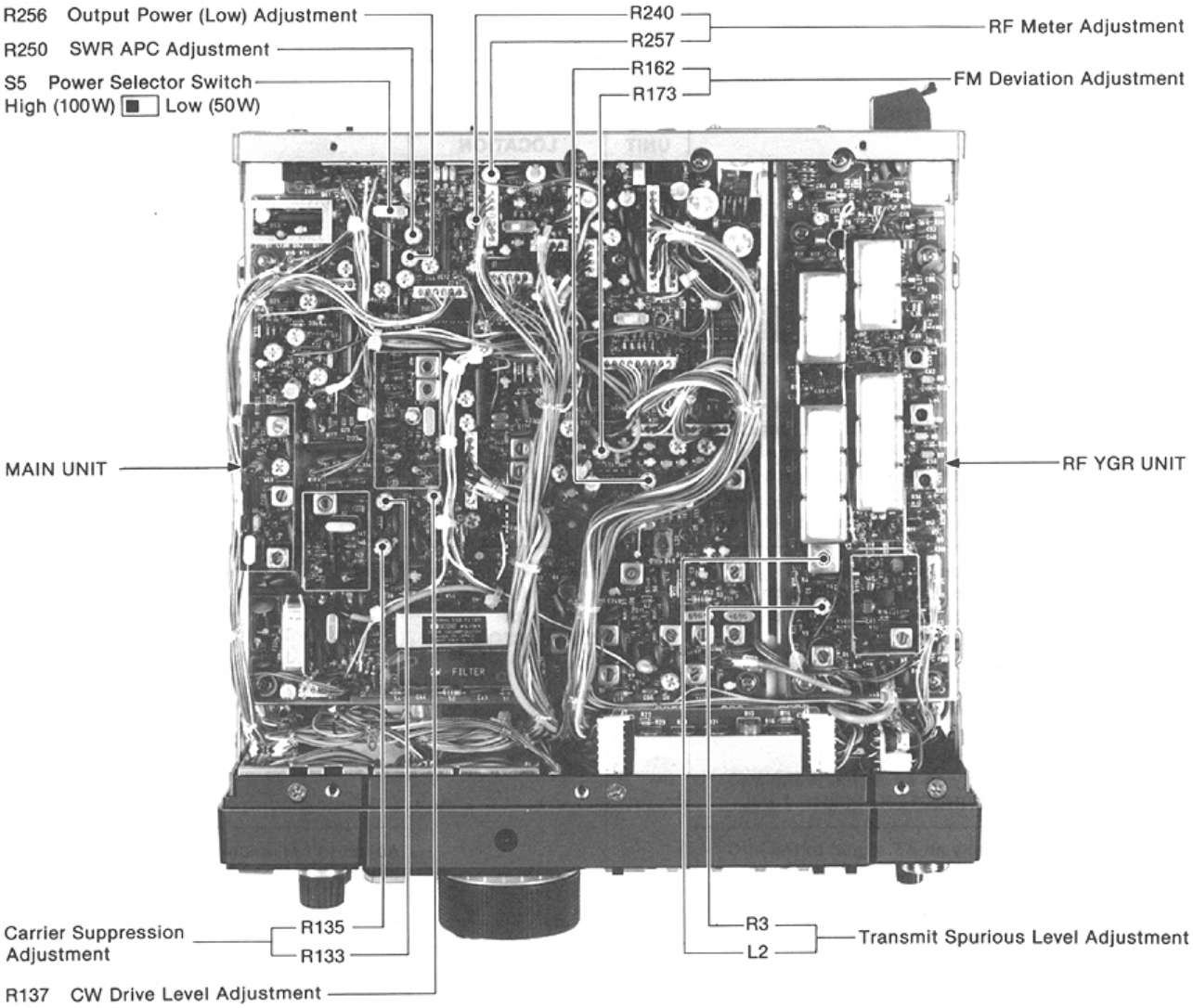

This picture shows the IC-275H model.

Downloaded from www.Manualslib.com manuals search engine

6-6 TRANSMITTER ADJUSTMENT (IC-275A/E)

TEST INSTRUMENTS REQUIRED

(1) AC POWER SUPPLY
- Output voltage : 13.8V DC
- Current capacity : 10A or more

(2) FREQUENCY COUNTER
- Frequency range : 0.1~180MHz
- Frequency accuracy : ±1ppm or better
- Sensitivity : 100mV or better

(3) RF POWER METER (TERMINATED TYPE)
- Measuring range : 10~50W
- Frequency range : 138~174MHz
- Impedance : 50Ω
- SWR : Less than 1:1.2

(4) AF GENERATOR (AG)
- Frequency range : 200~2000Hz
- Output level : 0~50mV

(5) AC MILLI-VOLTMETER
- Measuring range : 2~50mV

(6) FM DEVIATION METER
- Frequency minimum : 150MHz
- Measuring range : 0~±5kHz

(7) SPECTRUM ANALYZER

MEASUREMENT CONNECTION LOCATION

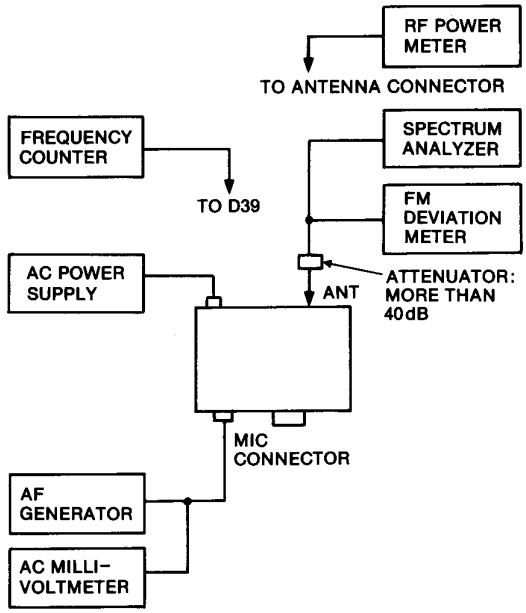

ADJUSTMENT		ADJUSTMENT CONDITIONS	MEASUREMENT		VALUE	ADJUSTMENT POINT	
			UNIT	LOCATION		UNIT	ADJUST
FM FREQUENCY	1	• FM mode • Transmit mode • R105 (MAIN): Max. CW	MAIN	Connect a frequency counter to the cathode of D39.	10.7500MHz	MAIN	L19
FM OUTPUT POWER	1	• Frequency display: 145.0000MHz (#06E, #10E) 146.0000MHz (#08A, #12A) • FM mode • Transmit mode • RF POWER CONTROL: Max. CW • W9 (MAIN): Connect a jumper wire between W9 and ground.	REAR PANEL	Connect an RF power meter to the ANTENNA CONNECTOR.	Adjust to maximum output.	MAIN RF YGR	L16, R82 L15 L1, C24
		NOTE: After adjustment, remove the jumper wire from W9.					
APC SET	1	• Frequency display: 145.0000MHz (#06E, #10E) 146.0000MHz (#08A, #12A) • USB mode • Transmit mode • MIC TONE CONTROL: Center position • MIC GAIN CONTROL: Center position • Apply an AF signal to the MIC CONNECTOR: 1.5kHz, 2mV.	REAR PANEL	Connect an RF power meter to the ANTENNA CONNECTOR.	12.5W	MAIN	R82
	2	• Apply an AF signal to the MIC CONNECTOR: 1.5kHz, 20mV. • R259: Center position • R256: Center position			Adjust to minimum output.		R244
	3				12.5W		R250
	4				30W		R244

Downloaded from www.Manualslib.com manuals search engine

TRANSMITTER ADJUSTMENT (IC-275A/E) (CONTINUED)

ADJUSTMENT		ADJUSTMENT CONDITIONS	MEASUREMENT		VALUE	ADJUSTMENT POINT	
			UNIT	LOCATION		UNIT	ADJUST
BALANCE	1	• Frequency display: 145.0000 MHz (#06E, #10E) 146.0000 MHz (#08A, #12A) • USB and LSB modes • Transmit mode • Apply an AF signal to the MIC CONNECTOR: 300 Hz, 2 mV.	REAR PANEL	Connect an RF power meter to the ANTENNA CONNECTOR.	Adjust to same output level on both modes.	MAIN	C119

CW: Clockwise

MAIN AND RF YGR UNITS

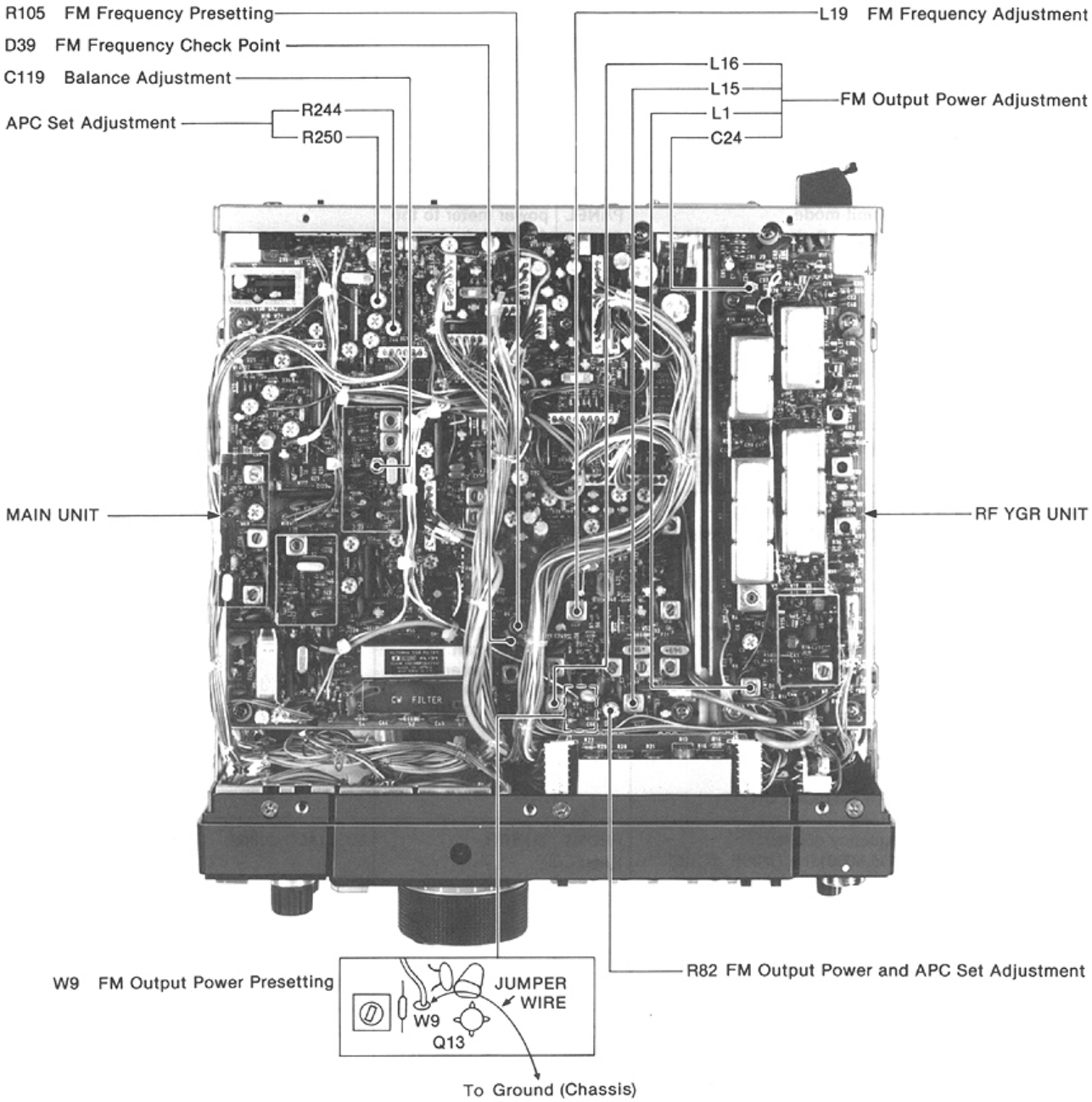

This picture shows the IC-275H model.

Downloaded from www.Manualslib.com manuals search engine

TRANSMITTER ADJUSTMENT (IC-275A/E) (CONTINUED)

ADJUSTMENT		ADJUSTMENT CONDITIONS	MEASUREMENT		VALUE	ADJUSTMENT POINT	
			UNIT	LOCATION		UNIT	ADJUST
POWER SET	1	• Frequency display: 145.0000 MHz (#06E, #10E) 146.0000 MHz (#08A, #12A) • USB mode • Transmit mode • MIC TONE CONTROL: Center position • MIC GAIN CONTROL: Center position • Apply an AF signal to the MIC CONNECTOR: 1.5kHz, 20mV. • RF POWER CONTROL: Max. CW	REAR PANEL	Connect an RF power meter to the ANTENNA CONNECTOR.	25W	MAIN	R259
	2	• RF POWER CONTROL: Max. CCW			2.5W		R256
ALC METER	1	• USB mode • Transmit mode • Apply an AF signal to the MIC CONNECTOR: 1.5kHz, 10mV. • METER SWITCH: C • ALC	FRONT PANEL	METER	100% (ALC scale)	MAIN	R265
RF METER (SET)	1	• FM mode • Transmit mode • Apply an AF signal to the MIC CONNECTOR: 1.5kHz, 20mV. • METER SWITCH: S • RF • TX-METER SWITCH: SET	REAR PANEL	Connect an RF power meter to the ANTENNA CONNECTOR.	10W	FRONT PANEL	RF POWER CONTROL
	2		FRONT PANEL	METER	SWR SET position	MAIN	R240
(SWR)	3	• TX-METER SWITCH: SWR	FRONT PANEL	METER	Less than 1.2 (SWR scale)		Verify
(RF)	4	• TX-METER SWITCH: RF • RF POWER CONTROL: Max. CW	FRONT PANEL	METER	90% (RF scale)		R257
COMP LEVEL	1	• USB mode • Apply an AF signal to the MIC CONNECTOR: 1.5kHz, 20mV.	REAR PANEL	Connect an RF power meter to the ANTENNA CONNECTOR.	12.5W	FRONT PANEL	MIC GAIN CONTROL
	2	• Apply an AF signal to the MIC CONNECTOR: 1.5kHz, 6.3mV. (10dB down) • COMP SWITCH: ON			12.5W	REAR PANEL	COMP LEVEL
FM DRIVE LEVEL	1	• Frequency display: 145.0000 MHz (#06E, #10E) 146.0000 MHz (#08A, #12A) • FM mode • Transmit mode • Apply no AF signal to the MIC CONNECTOR. • METER SWITCH: C • ALC	FRONT PANEL	METER	80% (ALC scale)	MAIN	R105
CW DRIVE	1	• CW mode • Transmit mode • Connect a key to the KEY JACK and key down.	FRONT PANEL	METER	80% (ALC scale)	MAIN	R137

Downloaded from www.Manualslib.com manuals search engine

TRANSMITTER ADJUSTMENT (IC-275A/E) (CONTINUED)

ADJUSTMENT		ADJUSTMENT CONDITIONS	MEASUREMENT		VALUE	ADJUSTMENT POINT	
			UNIT	LOCATION		UNIT	ADJUST
FM DEVIATION	1	• FM mode • Transmit mode • MIC TONE CONTROL: Center position • MIC GAIN CONTROL: Center position • Apply an AF signal to the MIC CONNECTOR: 1kHz, 20mV.	REAR PANEL	Connect an FM deviation meter to the ANTENNA CONNECTOR through an attenuator.	Dev.: ±4.8kHz	MAIN	R162
	2	• Apply an AF signal to the MIC CONNECTOR: 1kHz, 2mV.			Dev.: ±3.5kHz		R173
TRANSMIT SPURIOUS LEVEL	1	• Frequency display: 144.0000MHz • FM mode • Apply no AF signal to the MIC CONNECTOR. • RF POWER CONTROL: Max. CW • Transmit mode	REAR PANEL	Connect a spectrum analyzer to the ANTENNA CONNECTOR through an attenuator.	Minimum spurious level of carrier frequency ±10.75MHz.	RF YGR	L2, R3
		NOTE: Repeat adjustment 1 several times.					
CARRIER SUPPRES-SION	1	• USB mode • Apply no AF signal to the MIC CONNECTOR. • Transmit mode • Select USB and LSB mode alternately.	REAR PANEL	Connect a spectrum analyzer to the ANTENNA CONNECTOR through an attenuator.	Minimum carrier level (Less than −40dB) Same carrier level (USB and LSB mode)	MAIN	R133, R135

CW: Clockwise CCW: Counterclockwise

MAIN AND RF YGR UNITS

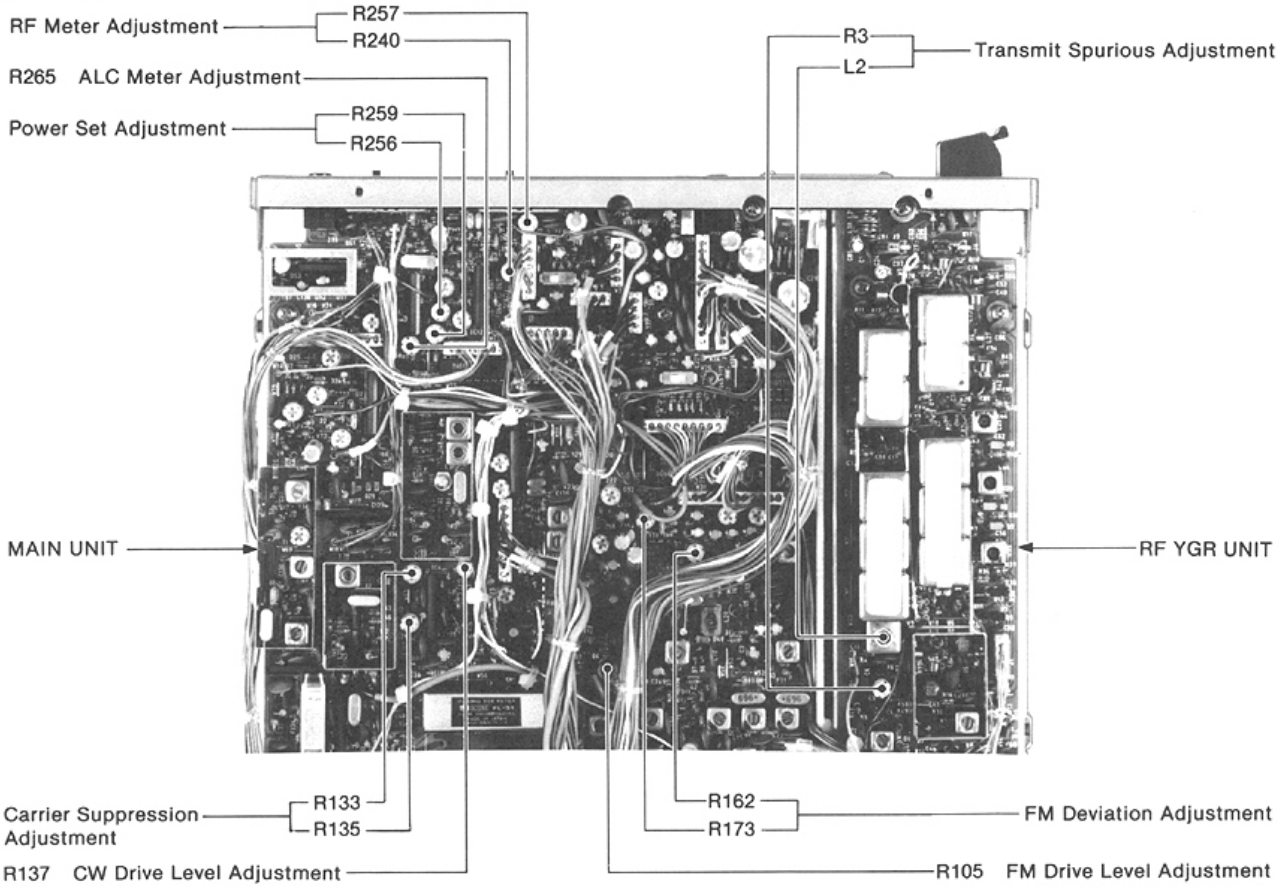

This picture shows the IC-275H model.

Downloaded from www.Manualslib.com manuals search engine

SECTION 7 BOARD LAYOUTS

7-1 FRONT UNITS (1)

• FRONT (SW-A) UNIT

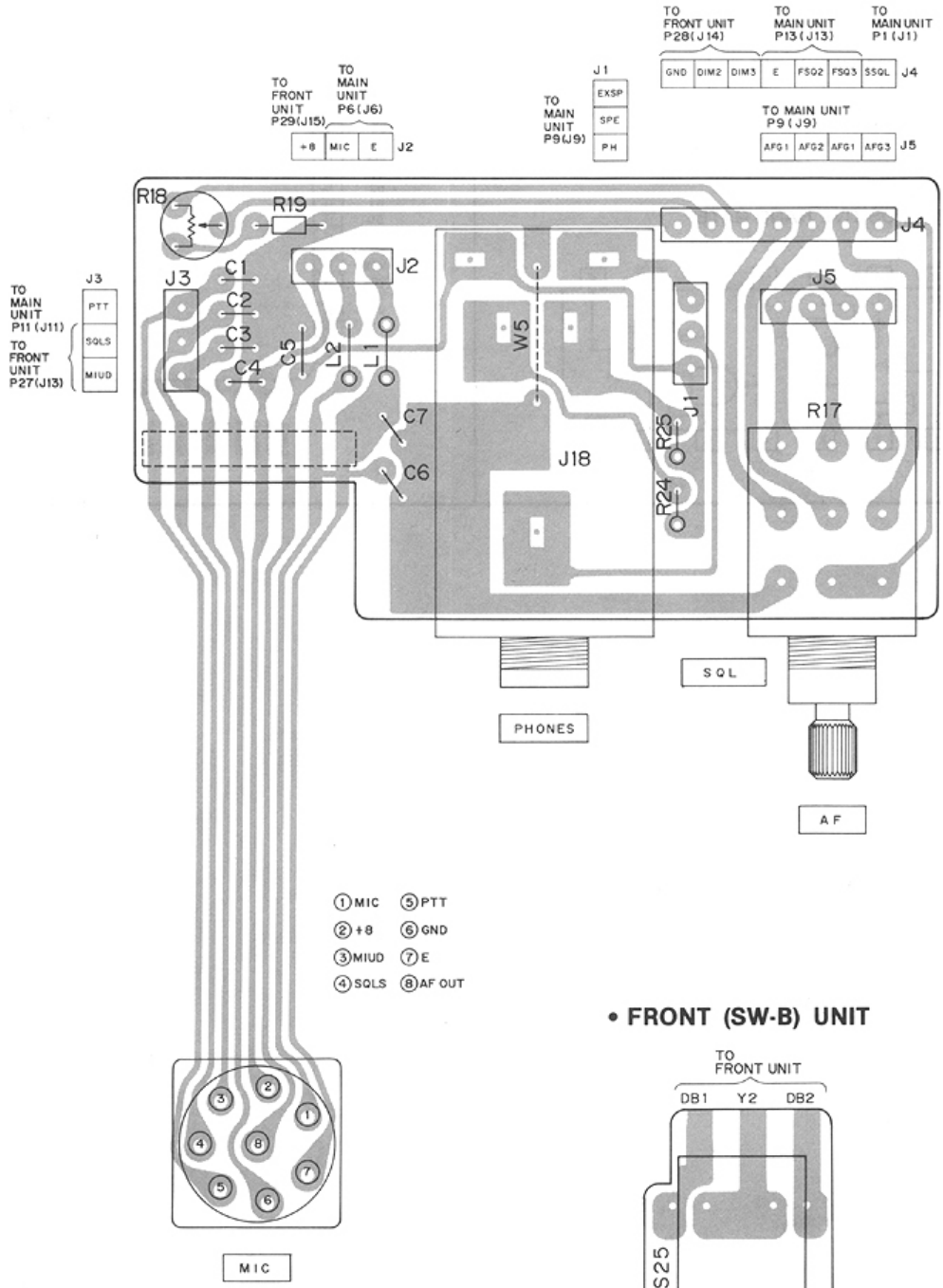

• FRONT (SW-B) UNIT

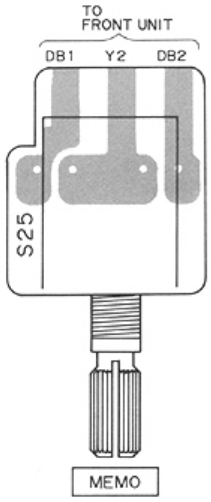

Downloaded from www.Manualslib.com manuals search engine

• **FRONT (VR-A) UNIT**

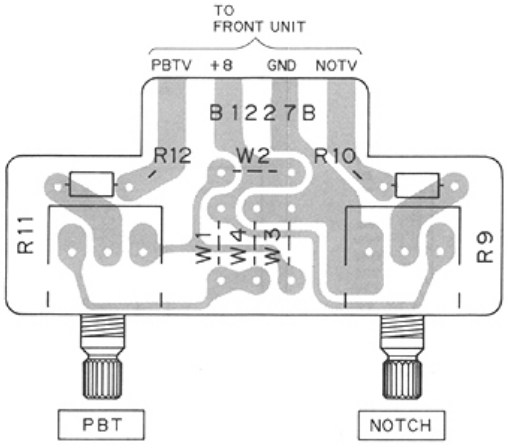

• **FRONT (VR-B) UNIT**

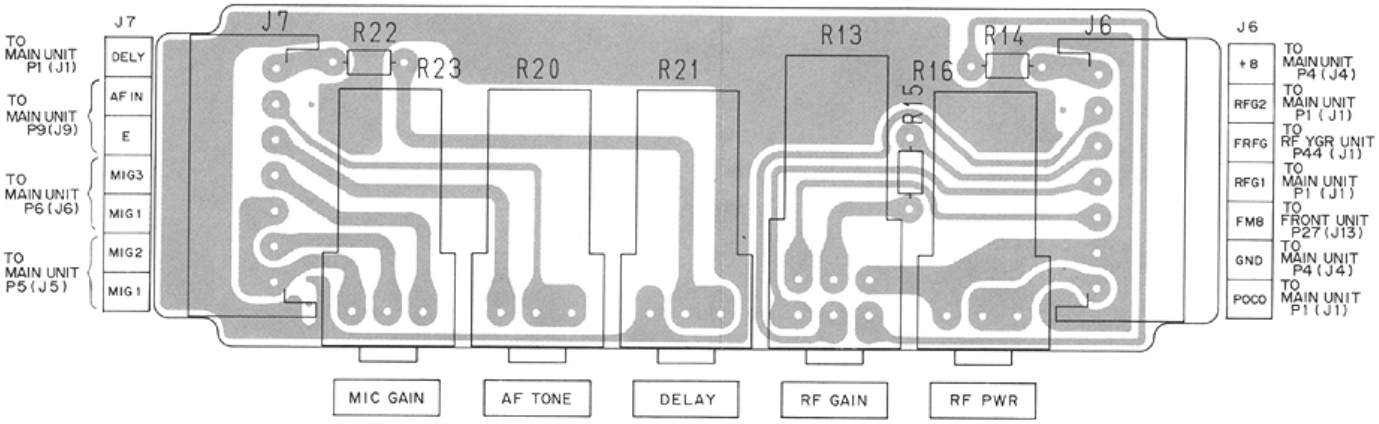

Downloaded from www.Manualslib.com manuals search engine

7-2 FRONT UNIT (2)

μPD4066BC IC1
(QUAD BILATERAL SWITCHING)

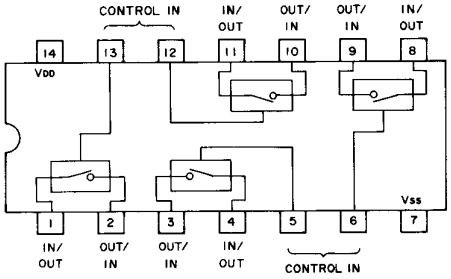

μPD4011BC IC2
(QUAD 2-INPUT POSITIVE NAND GATE)

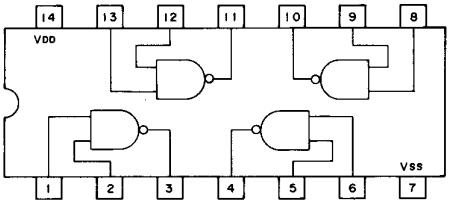

HD61602 IC3
(LCD DRIVER)

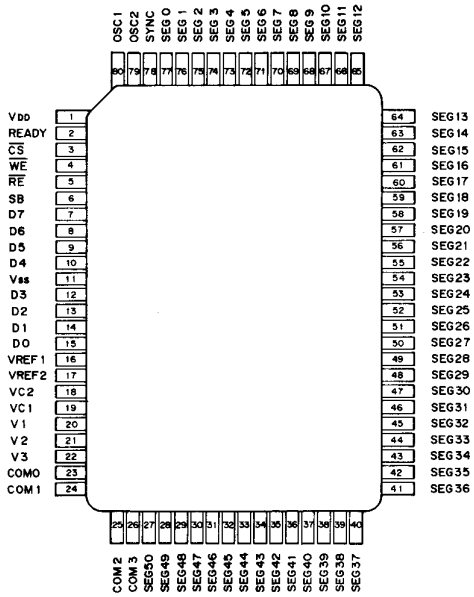

Downloaded from www.Manualslib.com manuals search engine

• **FRONT UNIT**

COMPONENTS SIDE

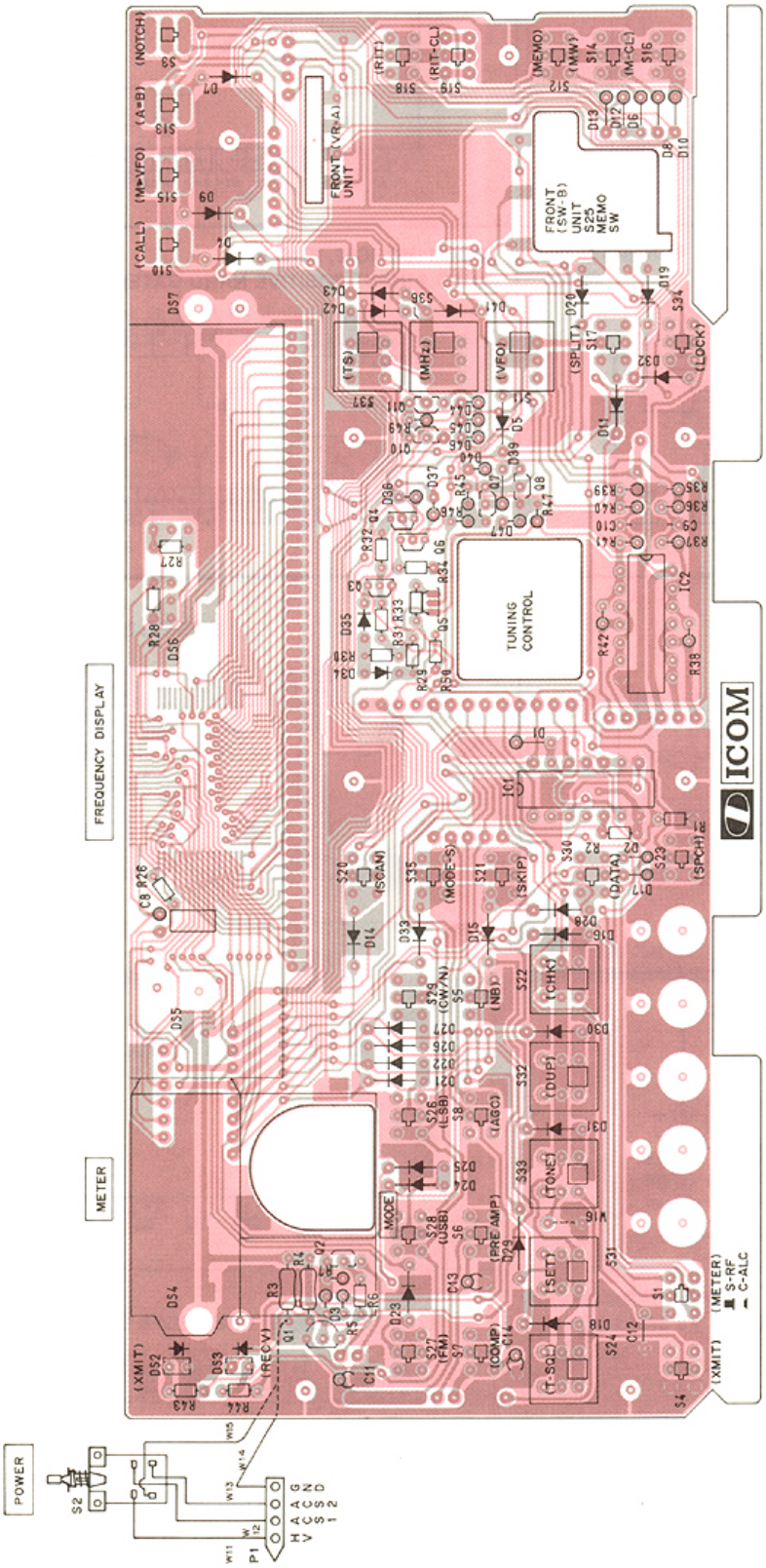

2SB562
Q1

2SC2785
Q2, Q3, Q4, Q6, Q8, Q11

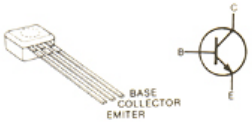

2SA1048
Q5, Q7

RN1204
Q10

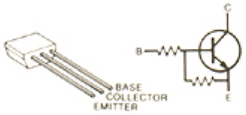

Downloaded from www.Manualslib.com manuals search engine

FOIL SIDE

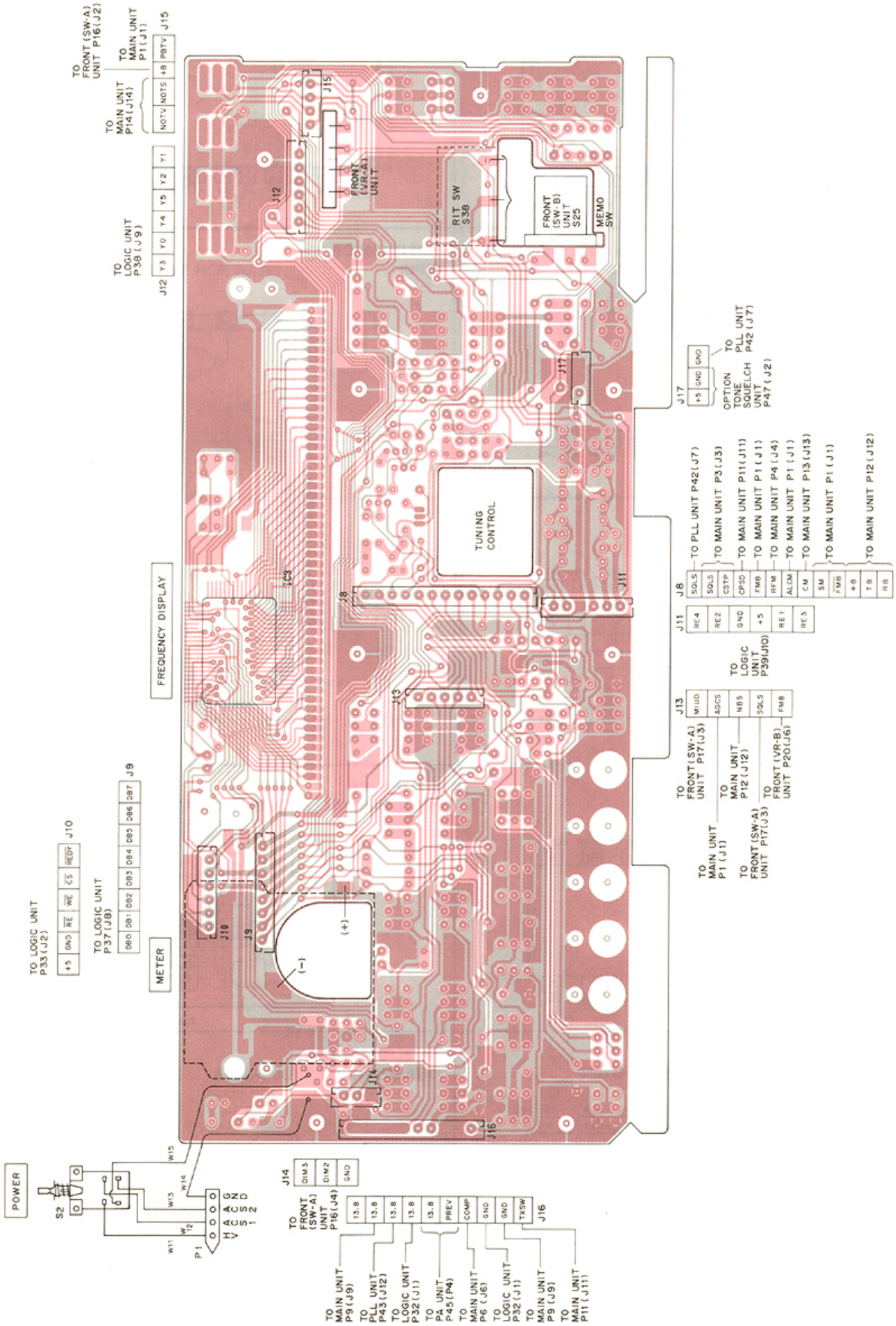

Downloaded from www.Manualslib.com manuals search engine

7-3 LOGIC AND SENSOR UNITS

μPD71055C IC1
(I/O EXPANDER)

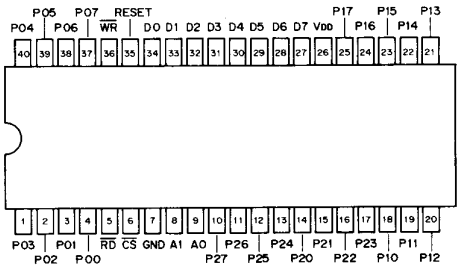

HM6116LP3L IC2
(RAM)

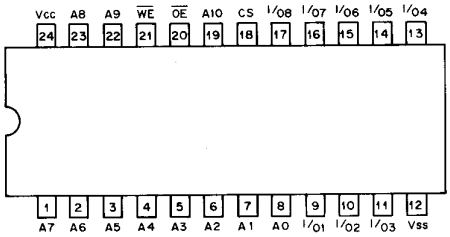

SC-1079 IC3
(ROM)

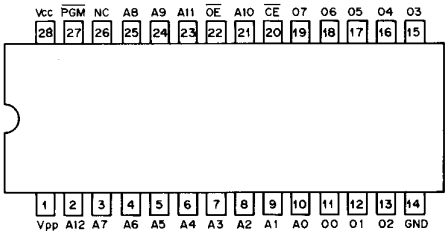

HD64B180ROP IC4
(CPU)

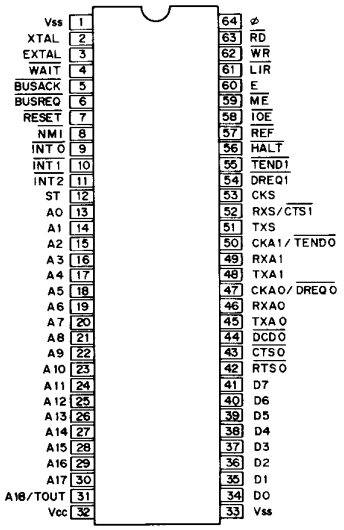

TC74HC244 IC5, IC6
(OCTAL 3-STATE BUS DRIVER)

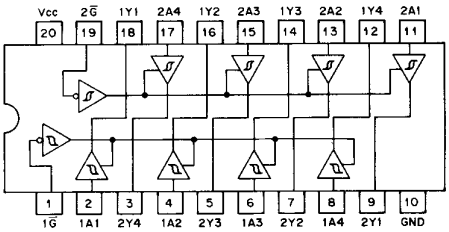

TC4510 IC7
(BCD UP/DOWN COUNTER)

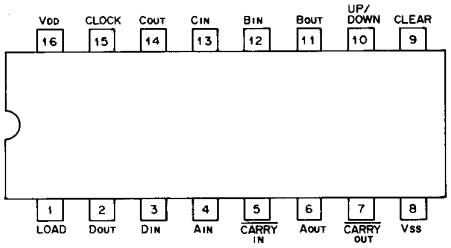

S-7116A IC8
(PROGRAMMABLE TONE GENERATOR)

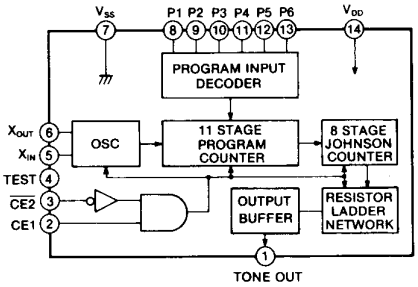

μPD4094BC IC9
(8-STAGE SHIFT AND STORE BUS REGISTER)

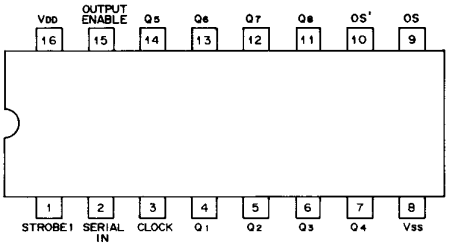

TA78L005AP IC10
(3-TERMINAL 5V REGULATOR)

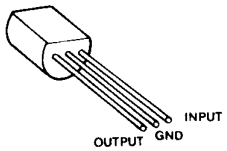

Downloaded from www.Manualslib.com manuals search engine

TC74HC32 IC11, IC12
(QUAD 2-INPUT POSITIVE OR GATE)

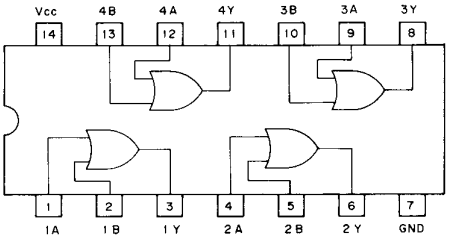

TC74HC00 IC13
(QUAD 2-INPUT NAND GATE)

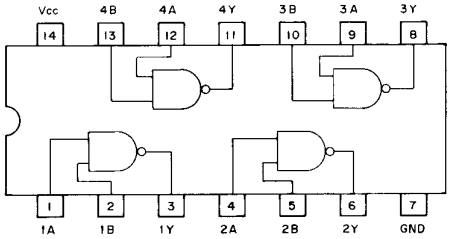

μPD4001BC IC14, IC19
(QUAD 2-INPUT POSITIVE NOR GATE)

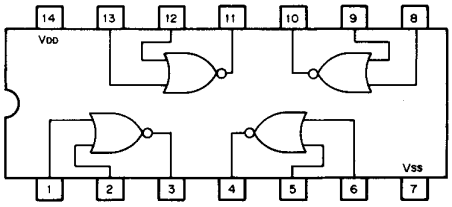

μPD4011BC IC15, IC16, IC18
(QUAD 2-INPUT POSITIVE NAND GATE)

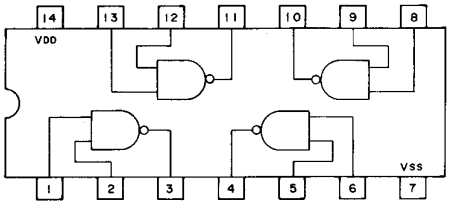

μPD4069UBC IC17
(HEX INVERTER)

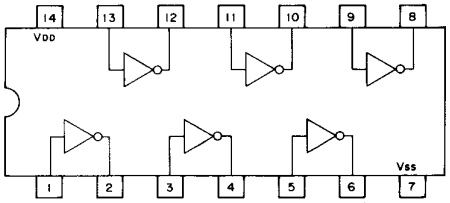

Downloaded from www.Manualslib.com manuals search engine

• LOGIC UNIT

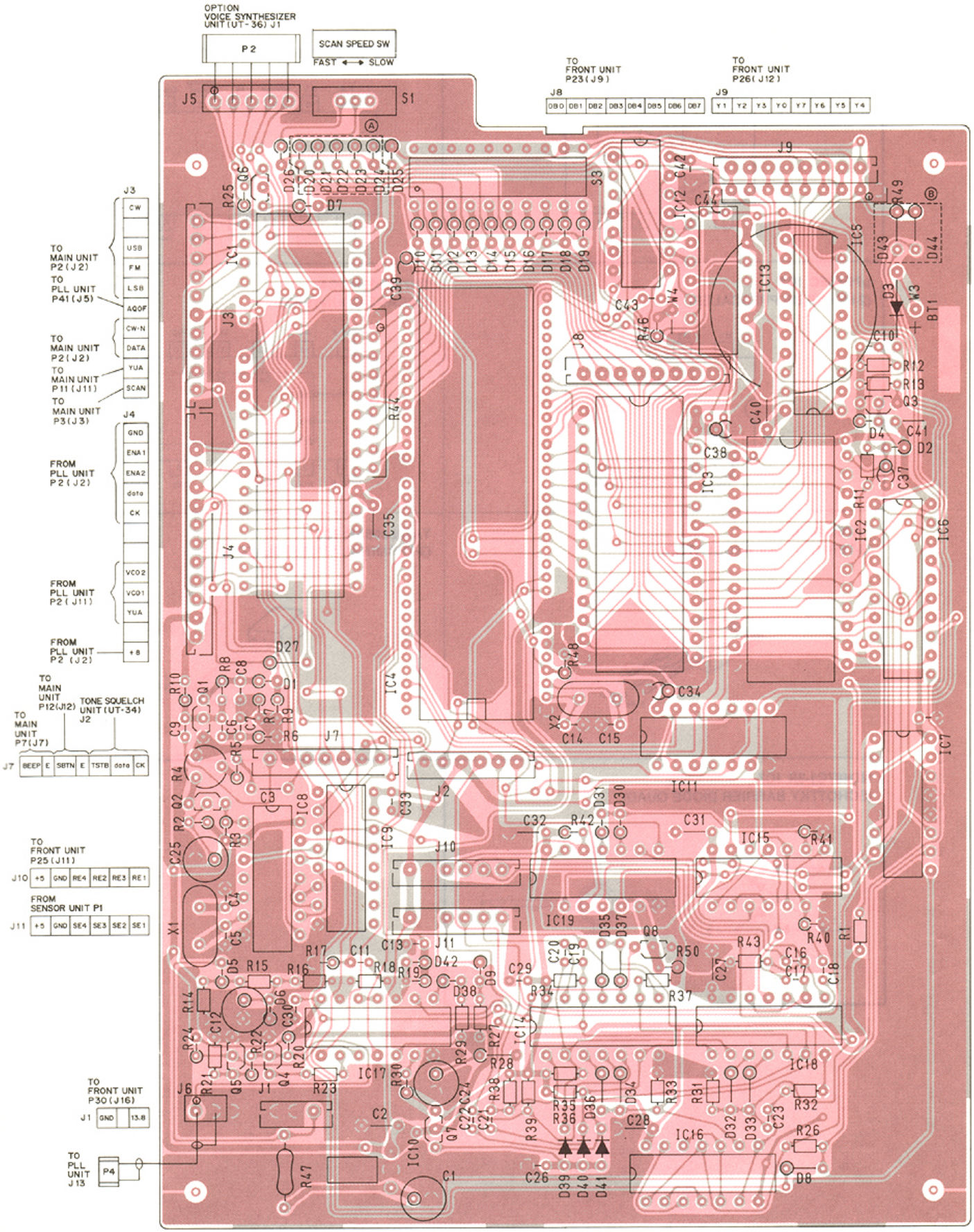

Downloaded from www.Manualslib.com manuals search engine

Ⓐ

• IC-275A/E

Area	D20	D21	D22	D23	D24
#06E	X	X	O	X	O
#08A	O	X	X	X	X
#10A	X	O	X	X	X
#12E	O	O	X	X	O

• IC-275H

Area	D20	D21	D22	D23	D24
#02H	X	X	O	X	O
#03H	O	X	X	X	X
#04H	X	O	X	X	X
#05H	O	O	X	X	O

O : MOUNTING X : NO MOUNTING

Ⓑ

• IC-275A/E

Area	D43	D44
#06E	X	O
#08A	O	X
#10A	O	O
#12E	O	O

• IC-275H

Area	D43	D44
#02H	X	O
#03H	O	X
#04H	O	O
#05H	O	O

O : MOUNTING X : NO MOUNTING

2SC2785
Q1, Q2, Q3, Q4,
Q5, Q6, Q7

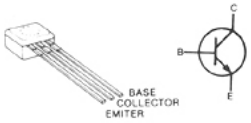

RN1204
Q8

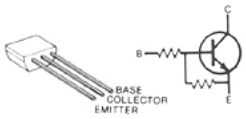

TO
FRONT UNIT
P24 (J10)

J2	GND	$\overline{CS}$	+5	$\overline{WE}$	$\overline{RE}$	REDY

• SENSOR UNIT

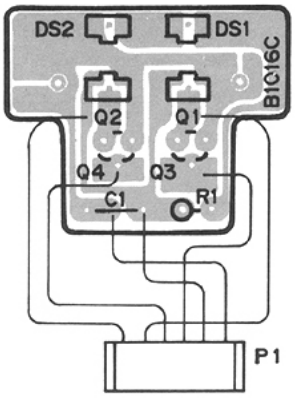

TO
LOGIC UNIT
J11

IS-433
Q1, Q2

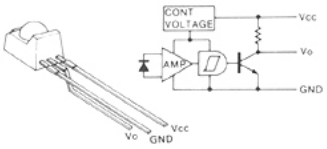

RN1204
Q3, Q4

Downloaded from www.Manualslib.com manuals search engine

7-4 PLL AND DDS UNITS

• PLL UNIT

NJM4560DD IC1
(DUAL OPERATIONAL AMPLIFIER)

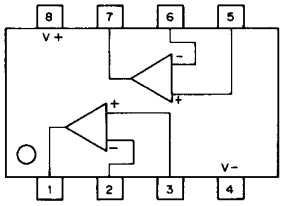

MC145158P1 IC2
(SERIAL INPUT PLL FREQUENCY SYNTHESIZER)

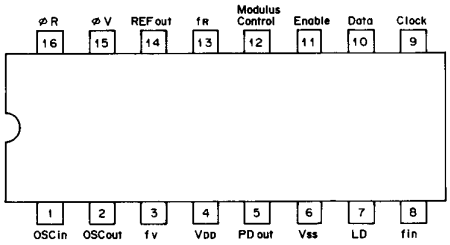

μPB555C IC3
(2-MODULUS PRESCALER)

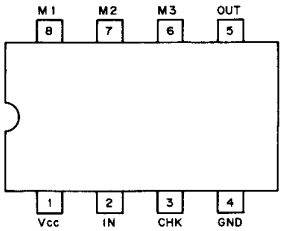

SN74LS90N IC4
(DECADE COUNTERS)

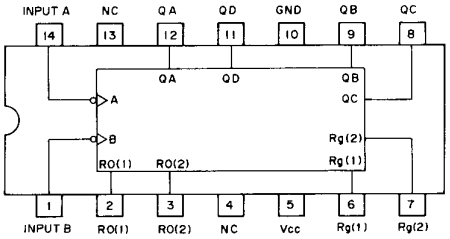

μA78M08UC IC5
(3-TERMINAL 8V REGULATOR)

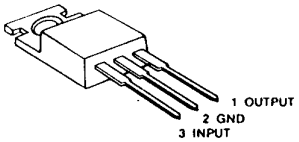

TA78L005AR IC6
(3-TERMINAL 5V REGULATOR)

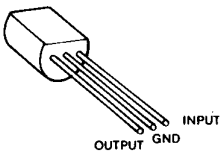

ND487C1-3R IC7
(SCHOTTKY BARRIER DIODE QUAD)

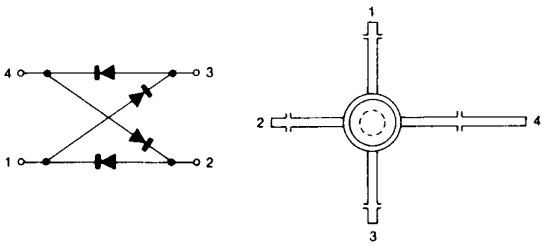

Downloaded from www.Manualslib.com manuals search engine

• PLL UNIT

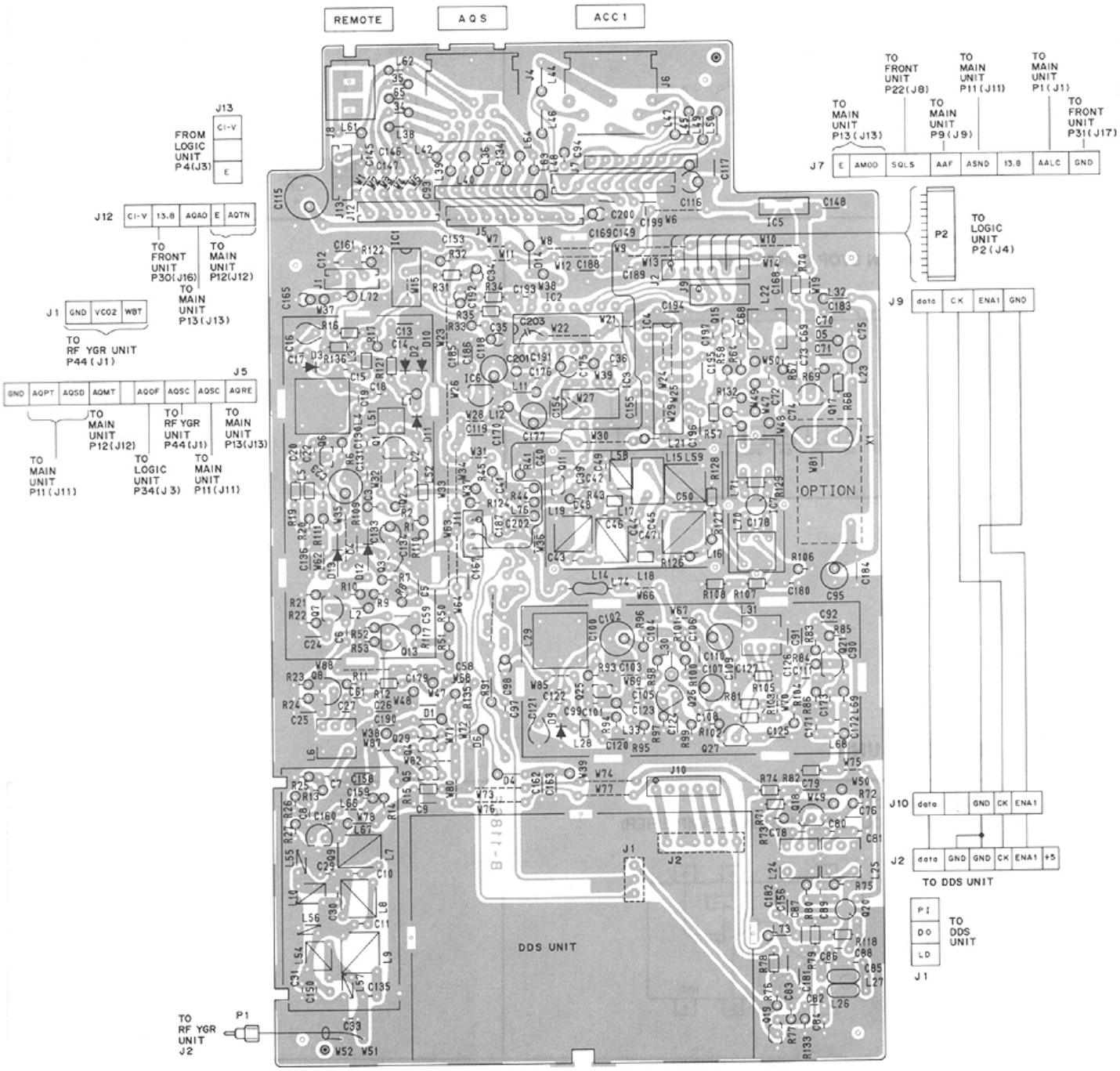

Downloaded from www.Manualslib.com manuals search engine

• DDS UNIT

2SK125
Q1

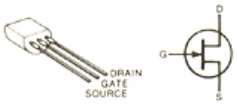

2SC2026
Q9

RN1204
Q2, Q3

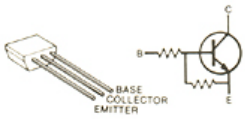

2SC2668
Q11, Q15

RN2204
Q4

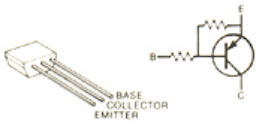

2SC383TM
Q17

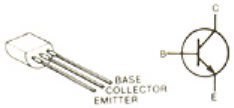

RN1202
Q5, Q29

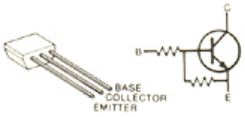

3SK74M
Q20

2SK192A
Q6, Q25

2SC763C
Q7, Q8, Q13,
Q18, Q19, Q21,
Q26, Q27

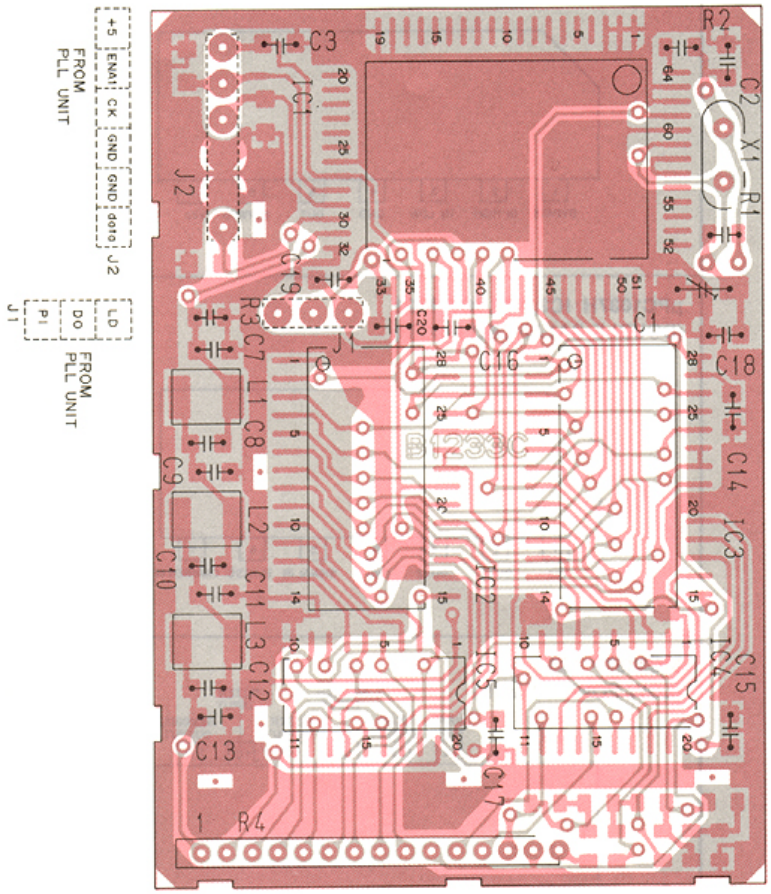

Downloaded from www.Manualslib.com manuals search engine

7-5 MAIN UNIT

• MAIN UNIT

μPC577H IC1, IC11
(FM IF AMPLIFIER)

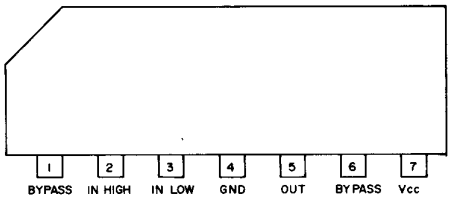

M5218L IC2, IC10, IC12, IC13
(LOW NOISE DUAL OPERATIONAL AMPLIFER)

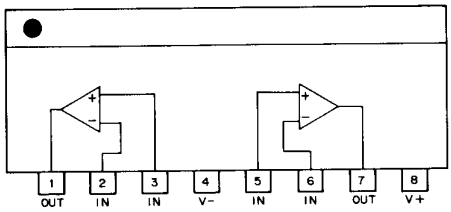

μPC1037H IC3, IC4, IC7, IC21
(DOUBLE BALANCED MIXER)

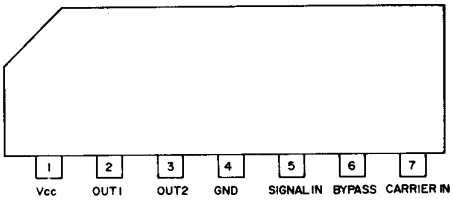

BA401 IC5
(LIMITER AMPLIFIER)

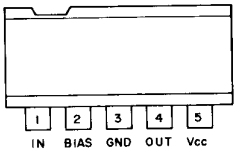

MC3357P IC6
(LOW POWER FM IF)

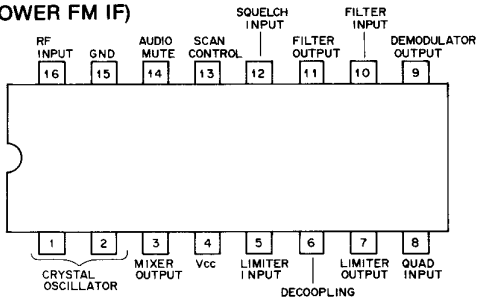

BA222 IC8
(MONOLITHIC TIMER)

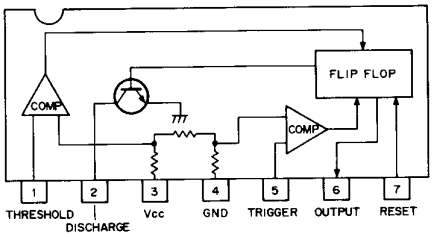

NJM4558D IC9
(LOW NOISE DUAL OPERATIONAL AMPLIFER)

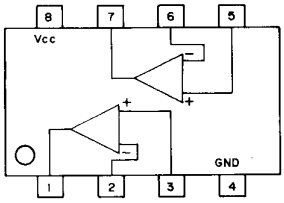

μPD4011BC IC14, IC15
(QUAD 2-INPUT POSITIVE NAND GATE)

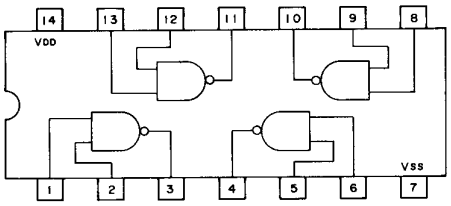

μA7808 IC16
(3-TERMINAL 8V REGULATOR)

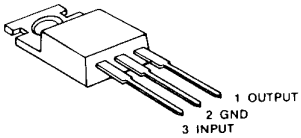

BA618 IC17
(DRIVER)

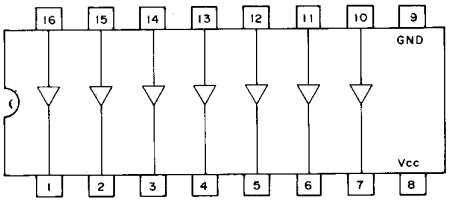

Downloaded from www.Manualslib.com manuals search engine

μPC2002H IC18
(AUDIO POWER AMPLIFIER)

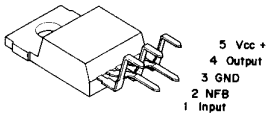

μPD4066BC IC19
(QUAD BILATERL SWITCHING)

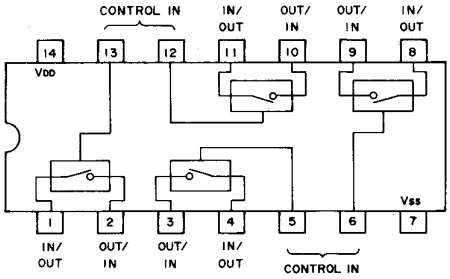

BA695 IC20
(CENTER SCAN STOP CONTROLER)

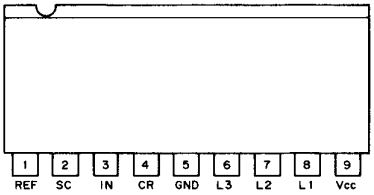

• SQUELCH UNIT

NJM4558M IC1
(LOW NOISE DUAL OPERATIONAL AMPLIFIER)

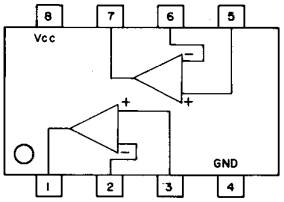

Downloaded from www.Manualslib.com manuals search engine

• MAIN UNIT

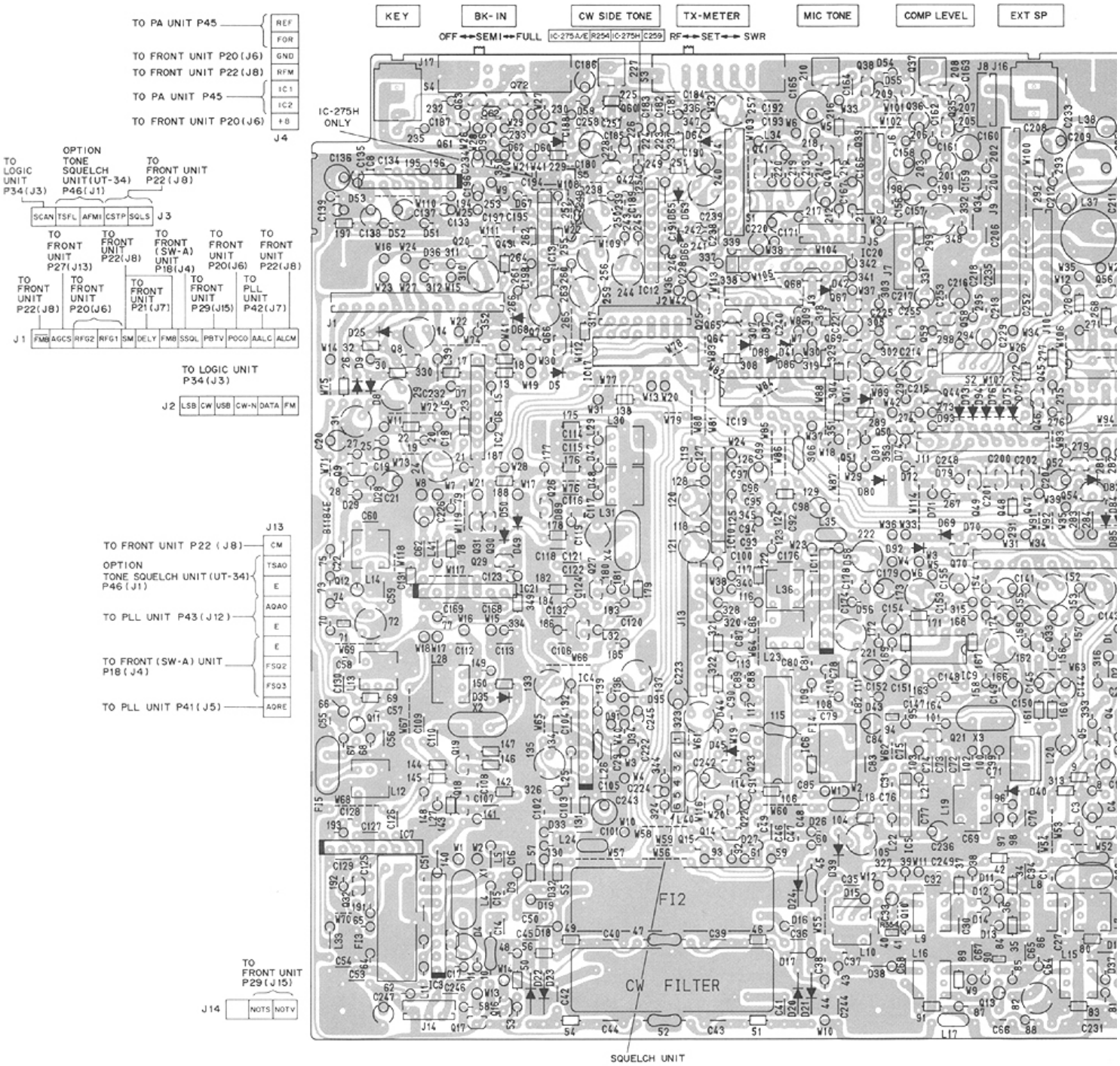

2SB596
Q57

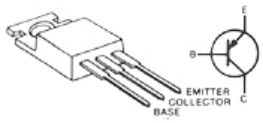

2SD468
Q46, Q50, Q54, Q55

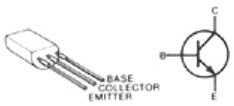

RN1202
Q36, Q37, Q38, Q49, Q51, Q56, Q71

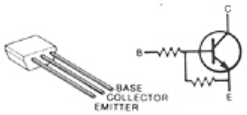

2SC1571
Q34

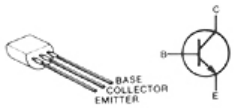

RN
Q2

Downloaded from www.Manualslib.com manuals search engine

EXT SP

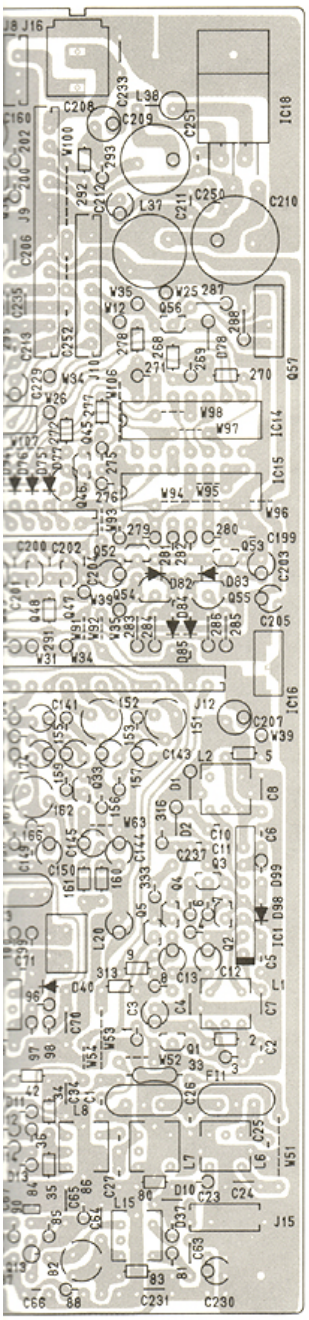

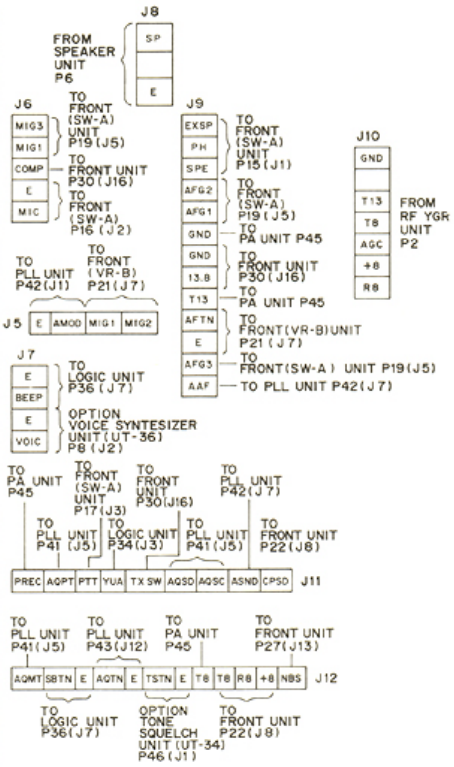

• SQUELCH UNIT

COMPONENTS SIDE

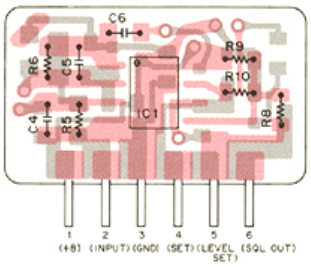

FOIL SIDE

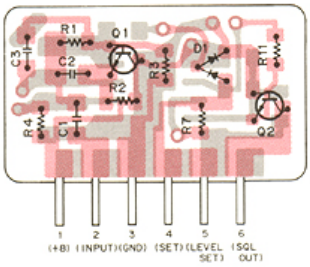

2SK192A
Q1

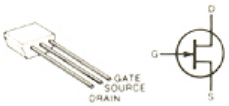

2SA1048
Q2, Q43, Q61

2SC2785
Q3, Q4, Q6, Q9, Q14, Q17, Q18, Q19, Q21, Q23, Q27, Q28, Q32, Q33, Q35, Q39, Q40, Q41, Q42, Q44, Q45, Q52, Q53, Q58, Q59, Q60, Q62, Q69

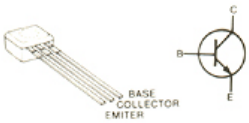

2SC2712
Q1

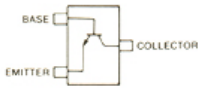

Symbol: LY

2SC3395
Q2

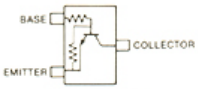

Symbol: BY

HSM88AS
D1

Symbol: C1

RN2202
Q5, Q15, Q16, Q65, Q72

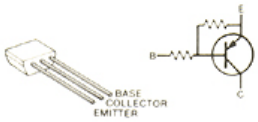

RN2204
Q22, Q68, Q70

3SK74M
Q10, Q11, Q12, Q13

RN1204
Q7, Q8, Q20, Q25, Q26, Q29, Q30, Q31, Q47, Q48, Q63, Q64, Q66, Q67

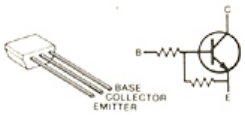

Downloaded from www.Manualslib.com manuals search engine

7-6 RF YGR UNIT

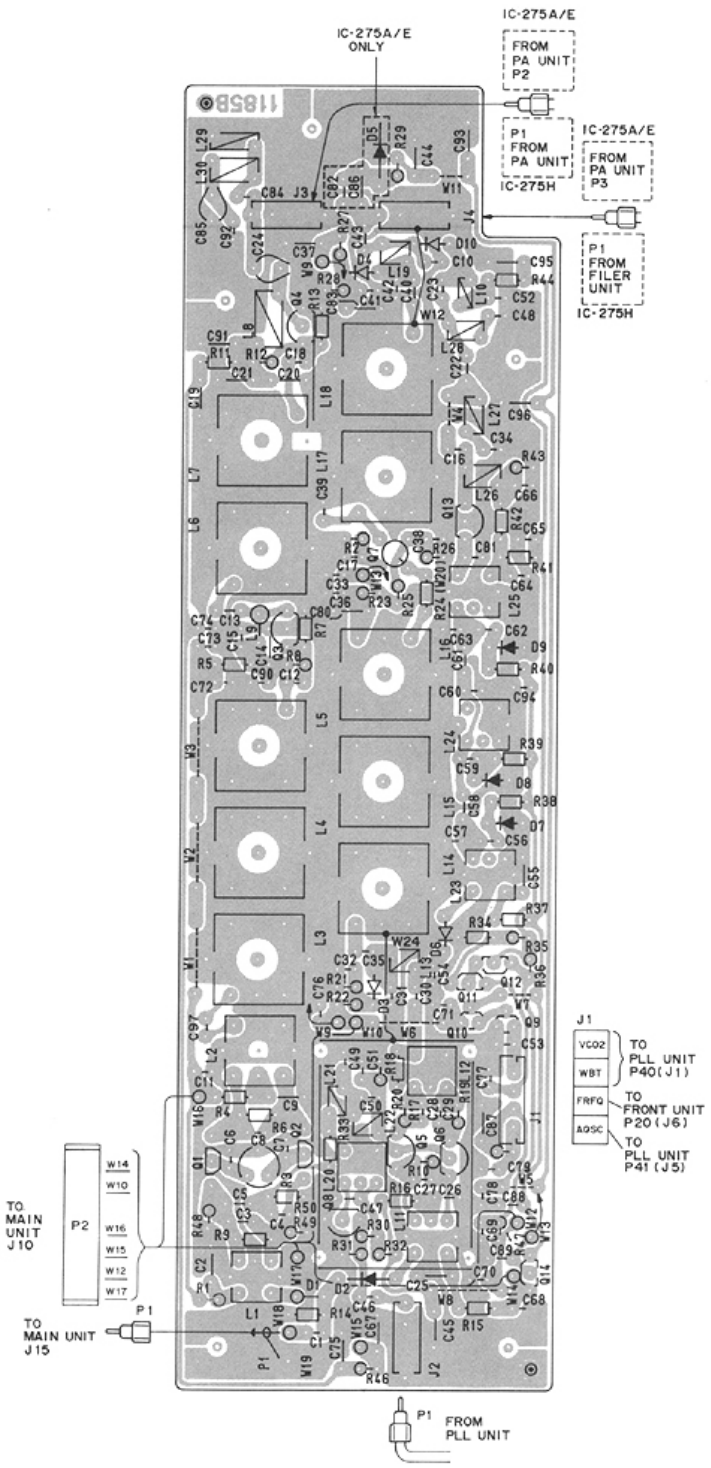

2SK241
Q1, Q2

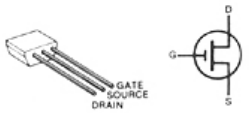

2SC3355
Q3, Q13

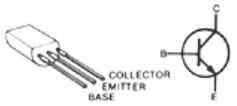

2SC2053
Q4, Q8

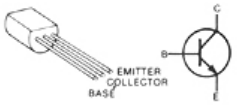

2SK125
Q5, Q6

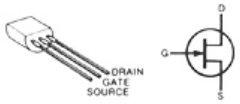

3SK121
Q7

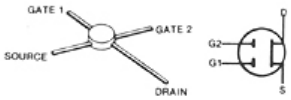

RN1204
Q9, Q11

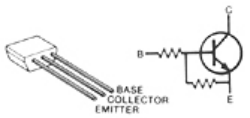

RN2202
Q10, Q12, Q14

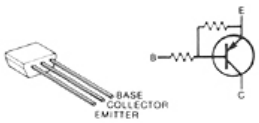

Downloaded from www.Manualslib.com manuals search engine

7-7 REG UNIT (IC-275A/E ONLY)

SG3524N IC1
(SWITCHING REGULATOR CONTROLLER)

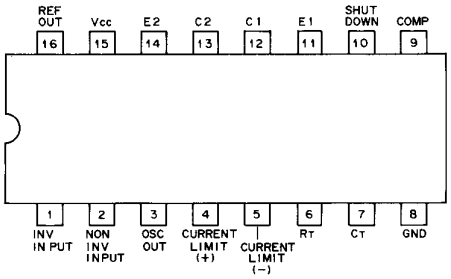

Downloaded from www.Manualslib.com manuals search engine

• **REG UNIT (IC-275A/E ONLY)**

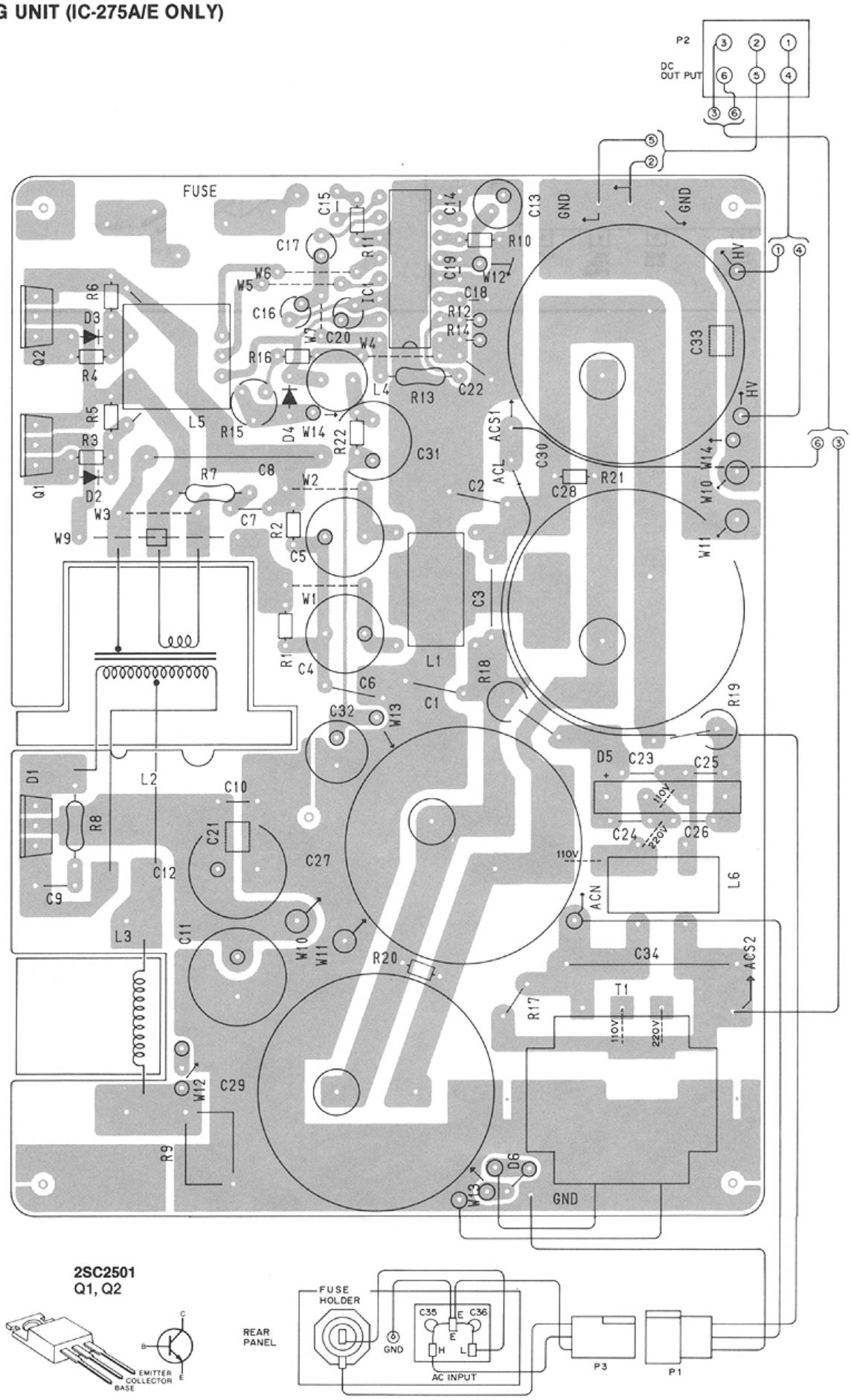

Downloaded from www.Manualslib.com manuals search engine

7-8 PA UNIT (IC-275A/E)

SC-1020 IC1
(POWER MODULE)

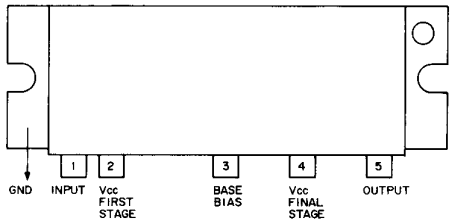

NJM7809A IC2
(3-TERMINAL 9V REGULATOR)

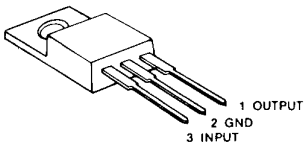

Downloaded from www.Manualslib.com manuals search engine

• PA (SWR) UNIT

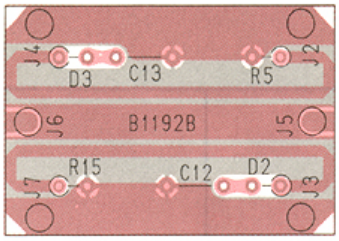

• PA UNIT

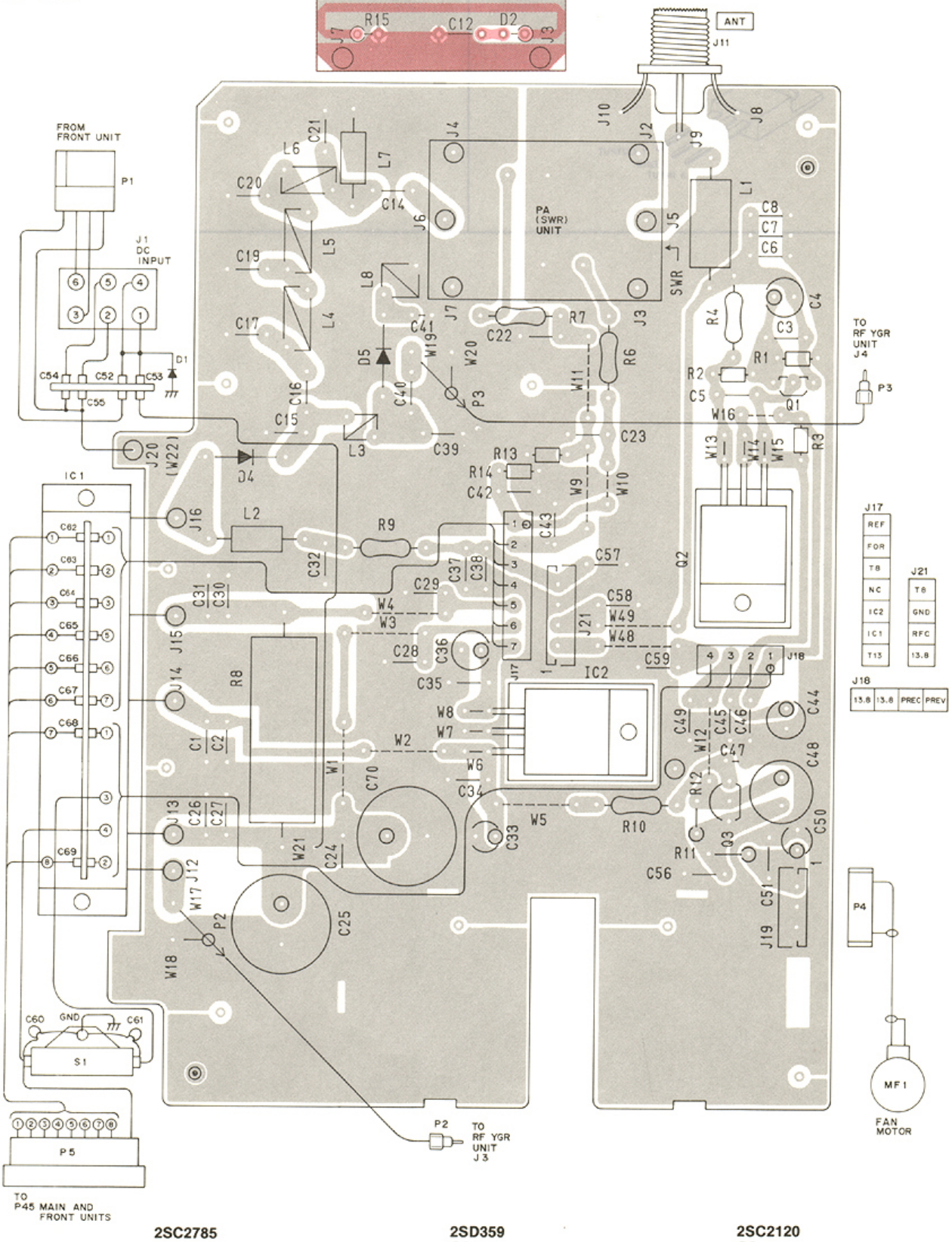

2SC2785
Q1

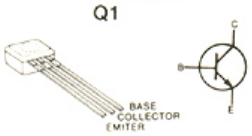

2SD359
Q2

2SC2120
Q3

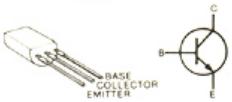

Downloaded from www.Manualslib.com manuals search engine

7-9 CTRL UNIT (IC-275H ONLY)

NJM7809A IC1
(3-TERMINAL 9V REGULATOR)

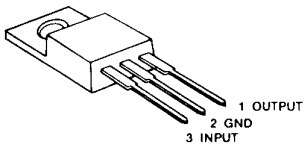

Downloaded from www.Manualslib.com manuals search engine

• CTRL UNIT (IC-275H ONLY)

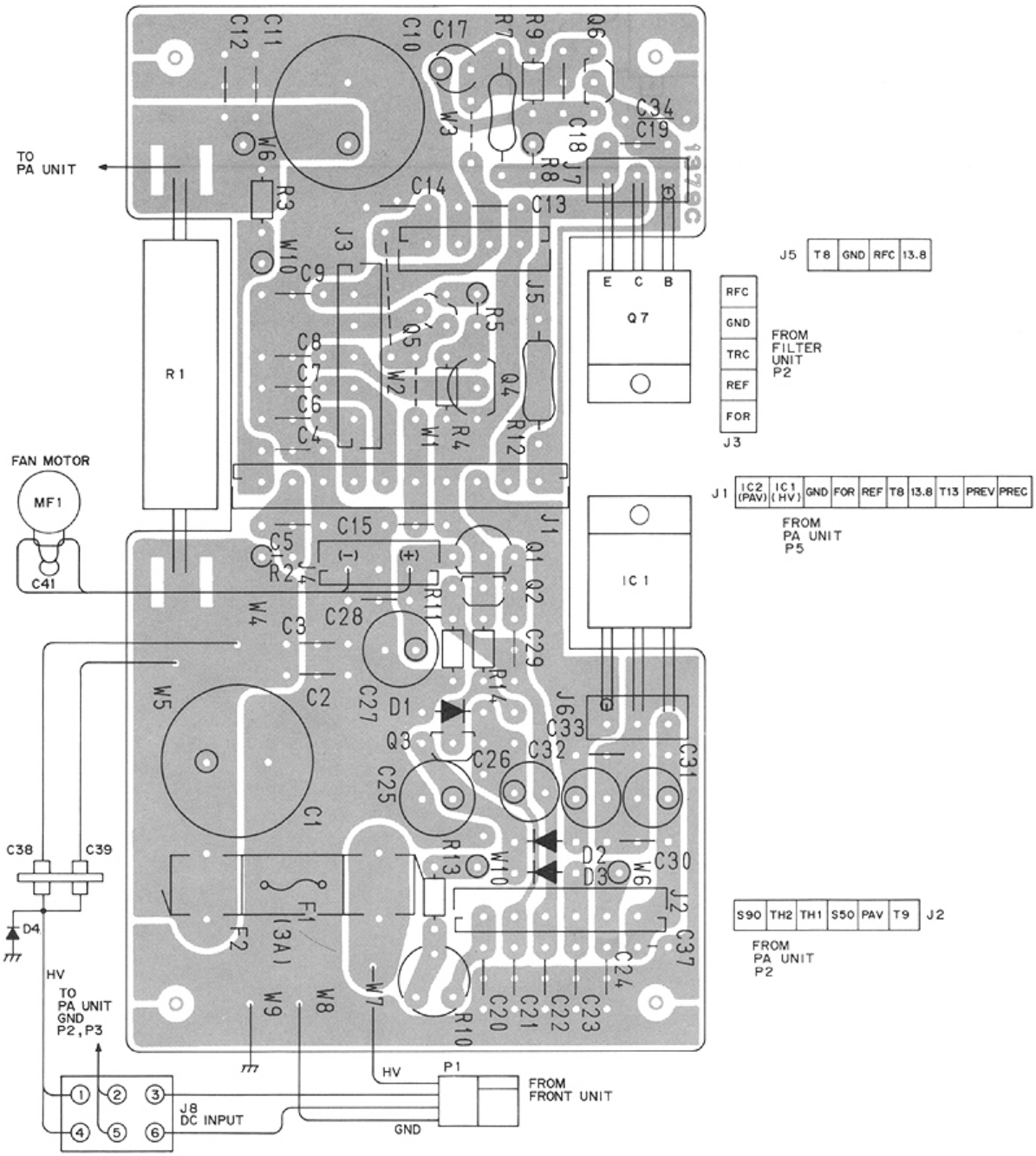

2SD468
Q1

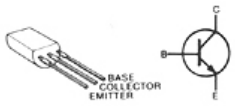

2SC2785
Q2, Q6

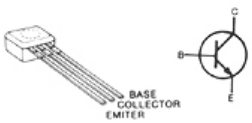

RN1204
Q3, Q5

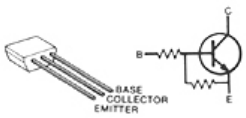

2SB562
Q4

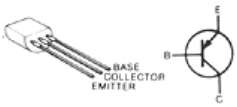

2SD359
Q7

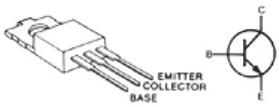

Downloaded from www.Manualslib.com manuals search engine

7-10 PA UNIT (IC275H)

SC-1013 IC1
(POWER MODULE)

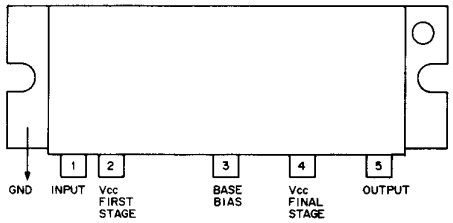

Downloaded from www.Manualslib.com manuals search engine

• PA UNIT (IC-275H)

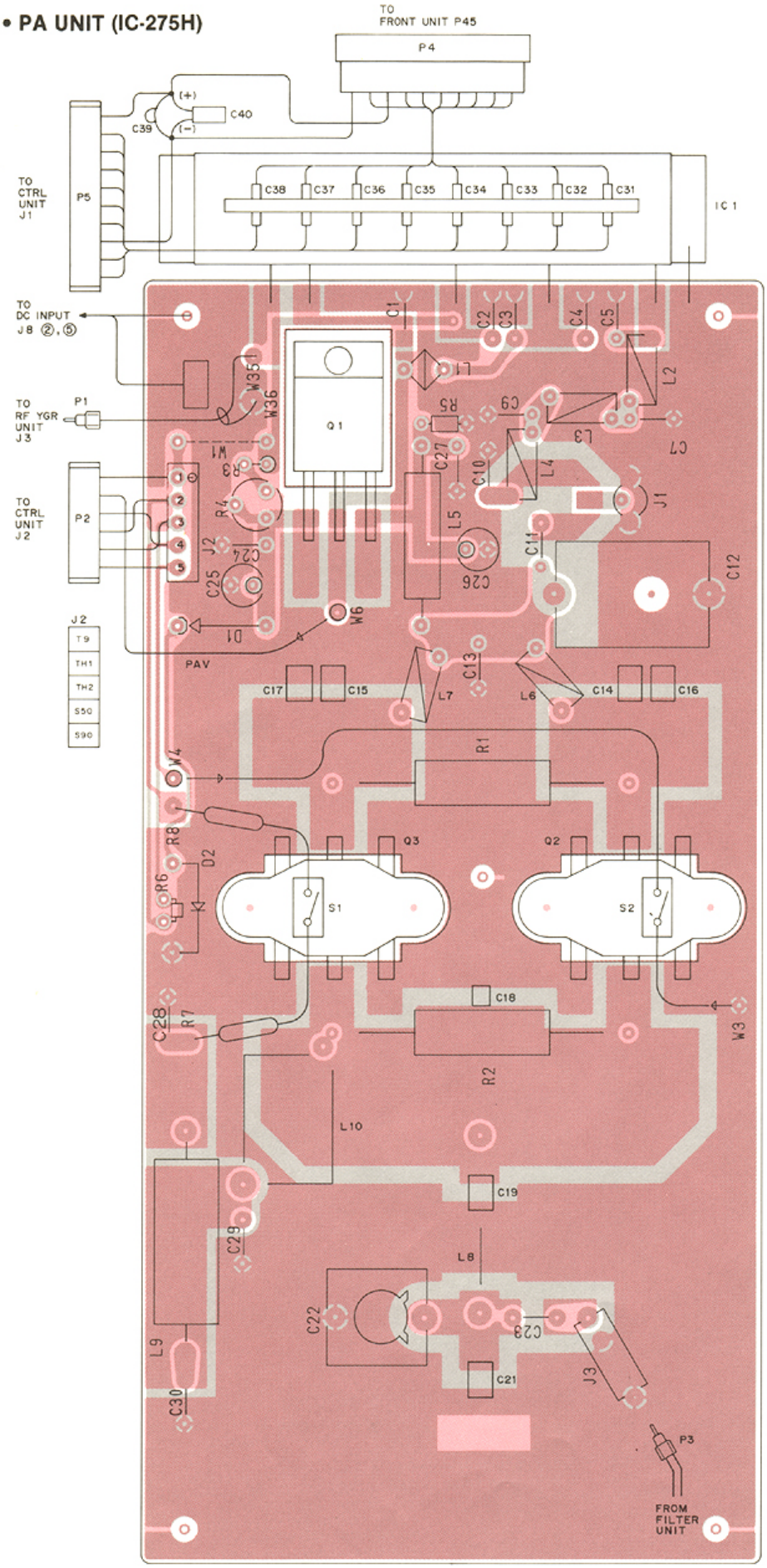

2SD880
Q1

2SC2694
Q2, Q3

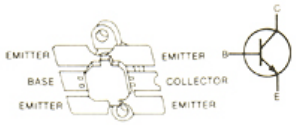

Downloaded from www.Manualslib.com manuals search engine

7-11 FILTER UNIT (IC-275H ONLY)

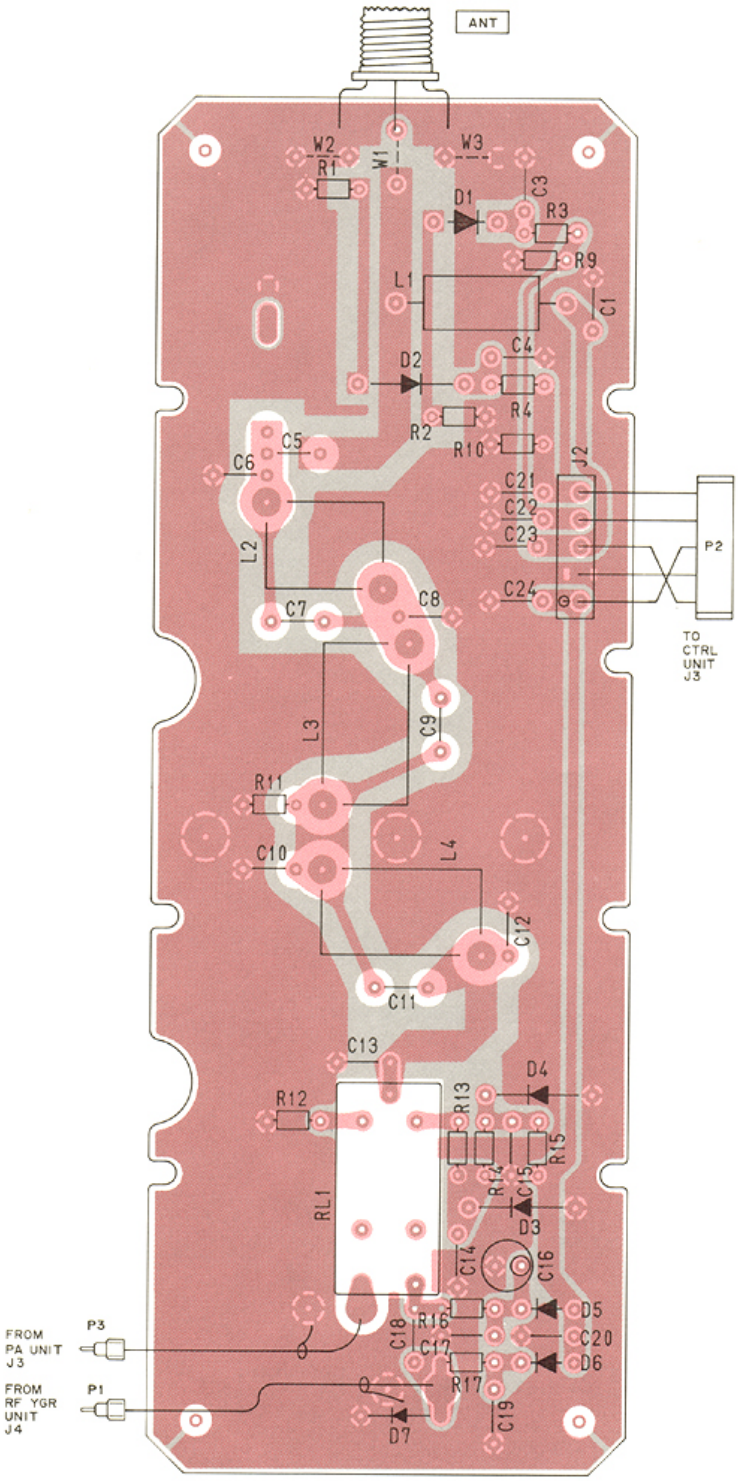

Downloaded from www.Manualslib.com manuals search engine

SECTION 8 VOLTAGE DIAGRAMS

8-1 FRONT UNIT

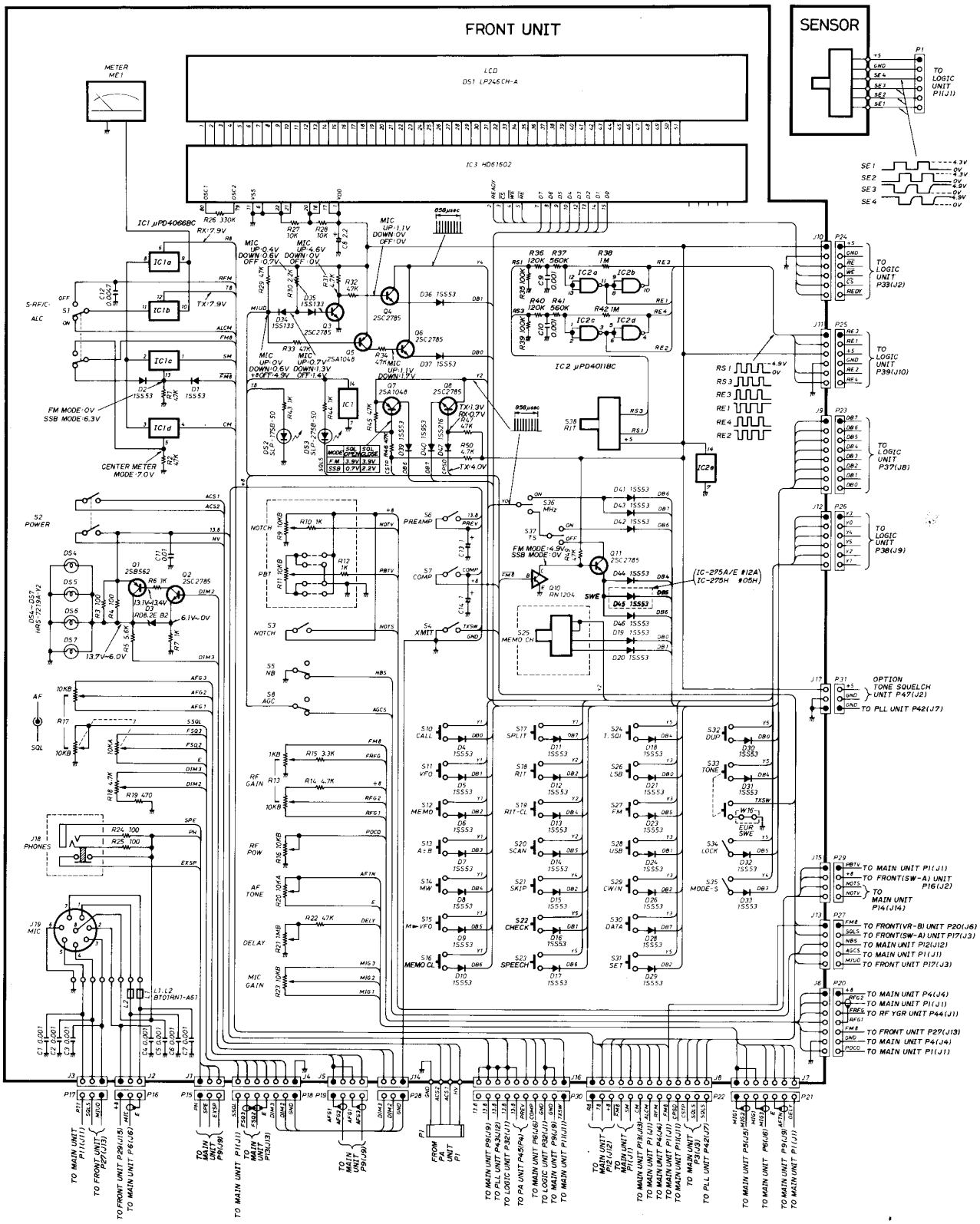

Downloaded from www.Manualslib.com manuals search engine

8-2 LOGIC UNIT

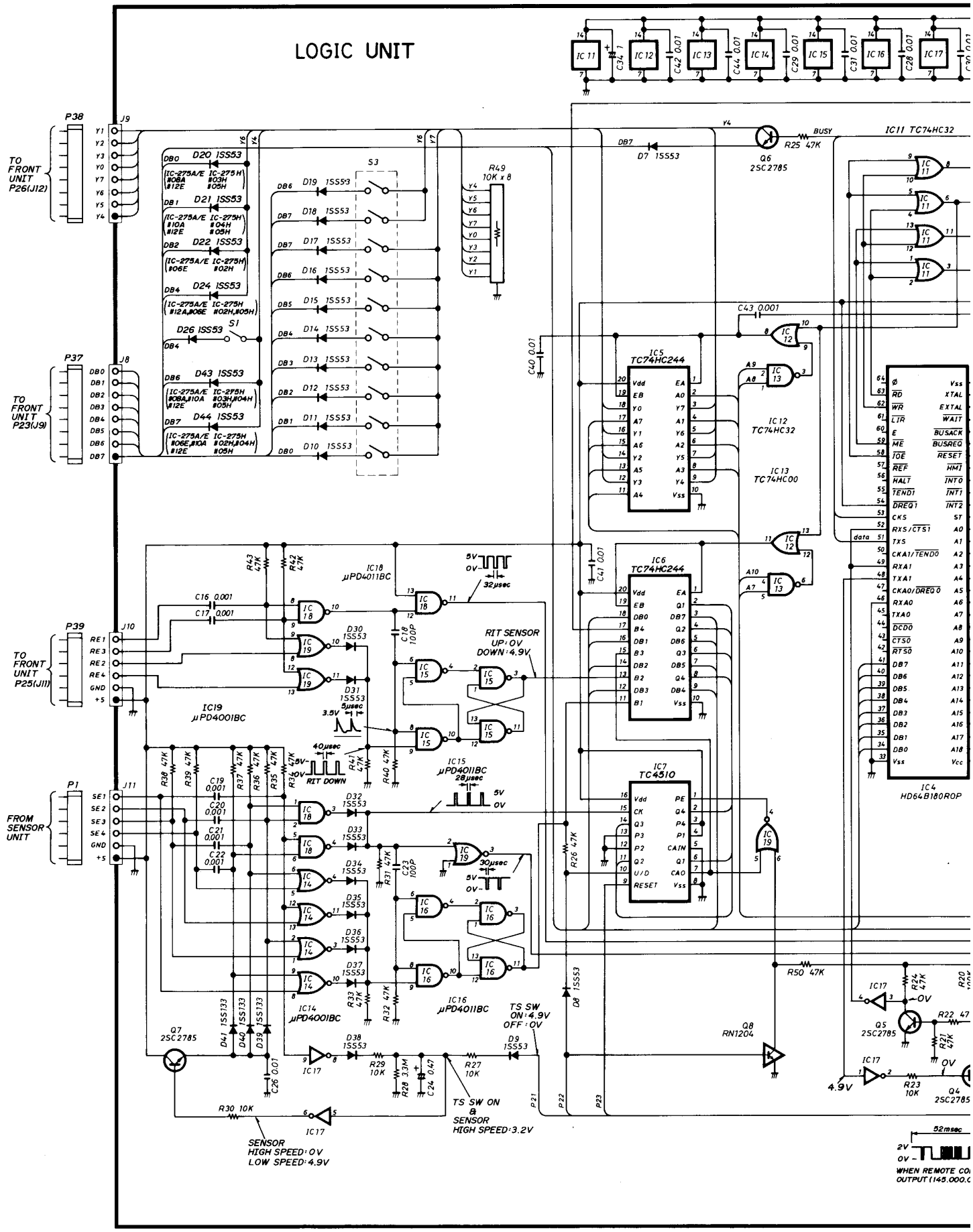

Downloaded from www.Manualslib.com manuals search engine

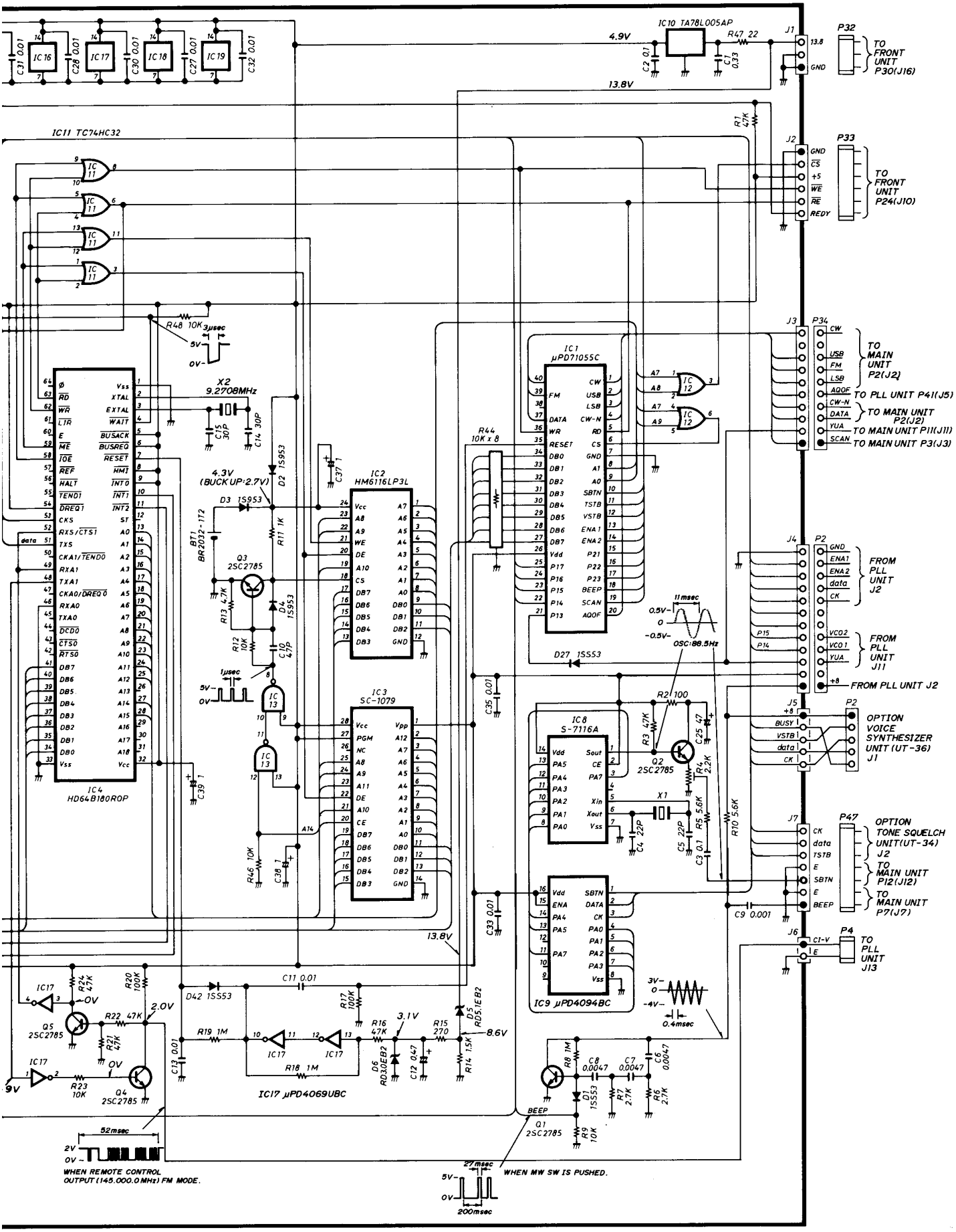

Downloaded from www.Manualslib.com manuals search engine

8-3 PLL UNIT

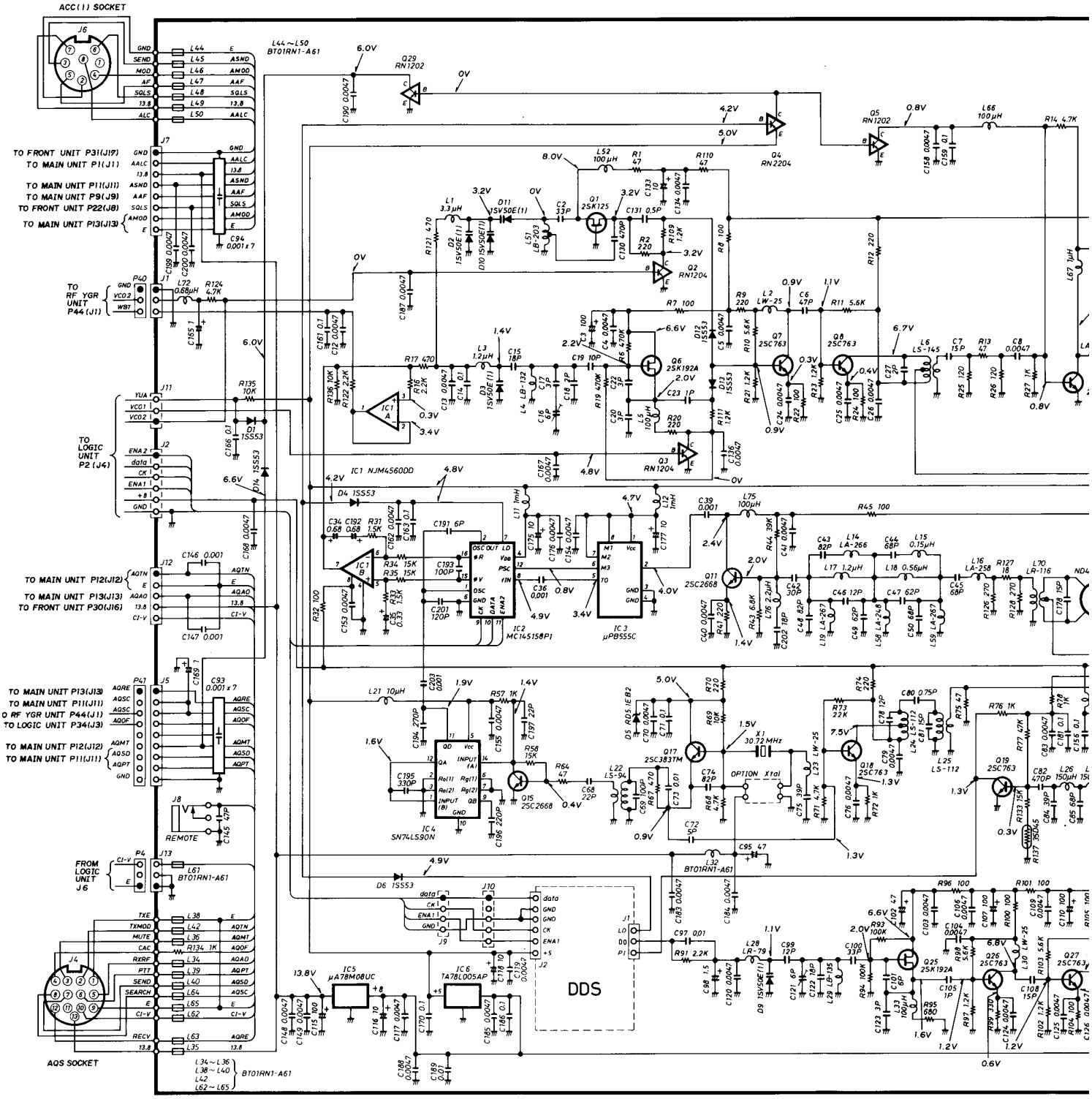

Downloaded from www.Manualslib.com manuals search engine

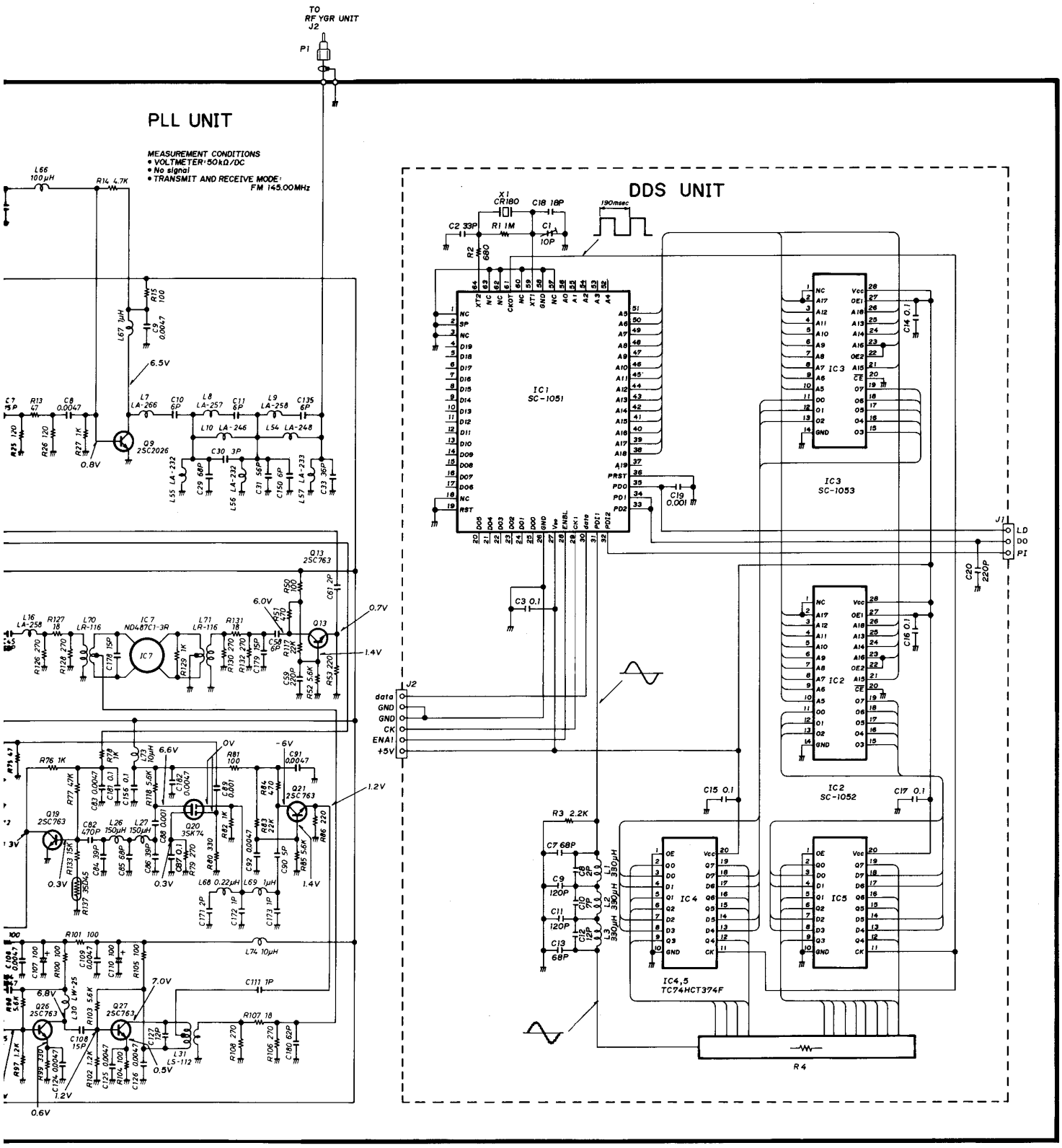

Downloaded from www.Manualslib.com manuals search engine

8-4 MAIN UNIT

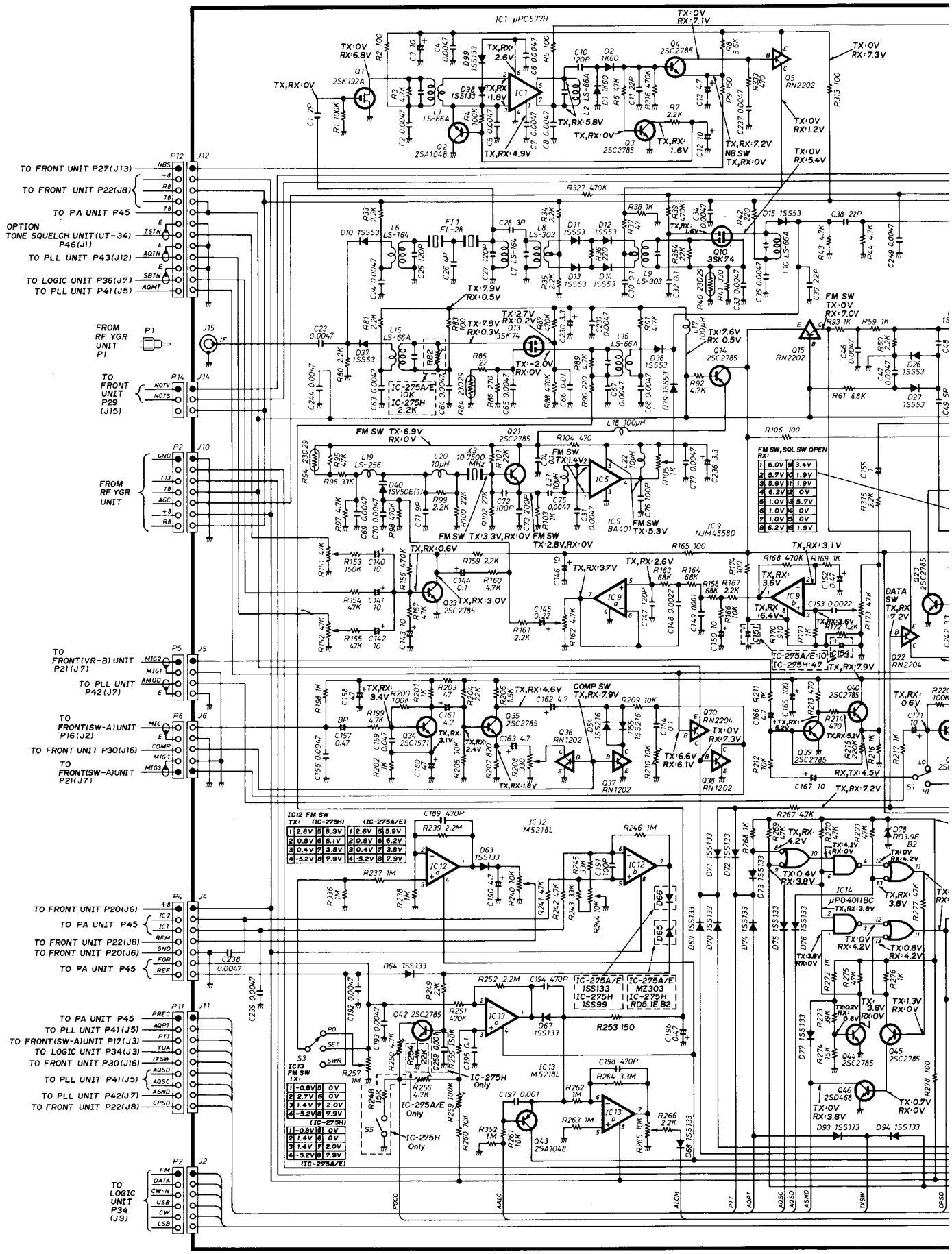

Downloaded from www.Manualslib.com manuals search engine

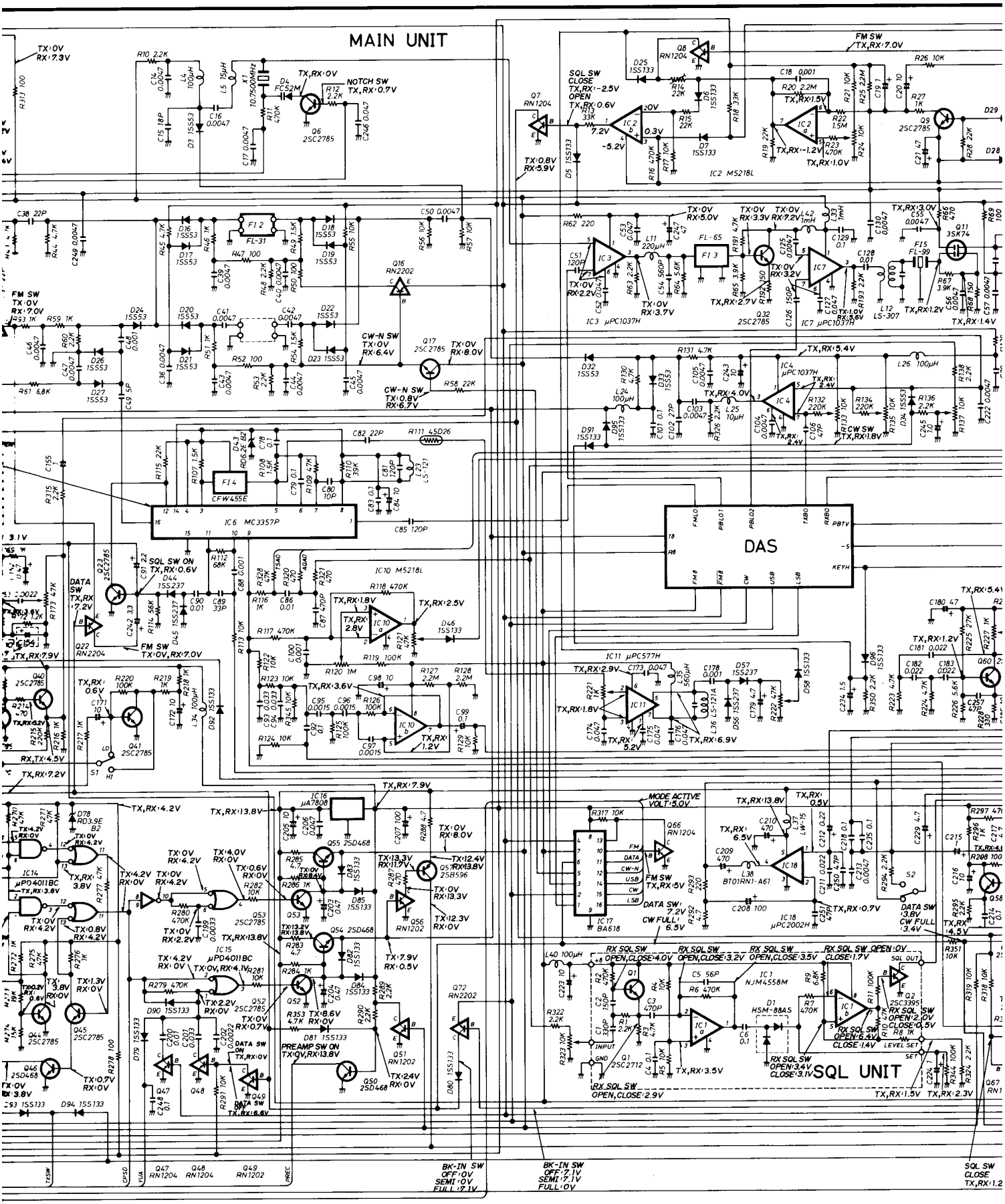

Downloaded from www.Manualslib.com manuals search engine

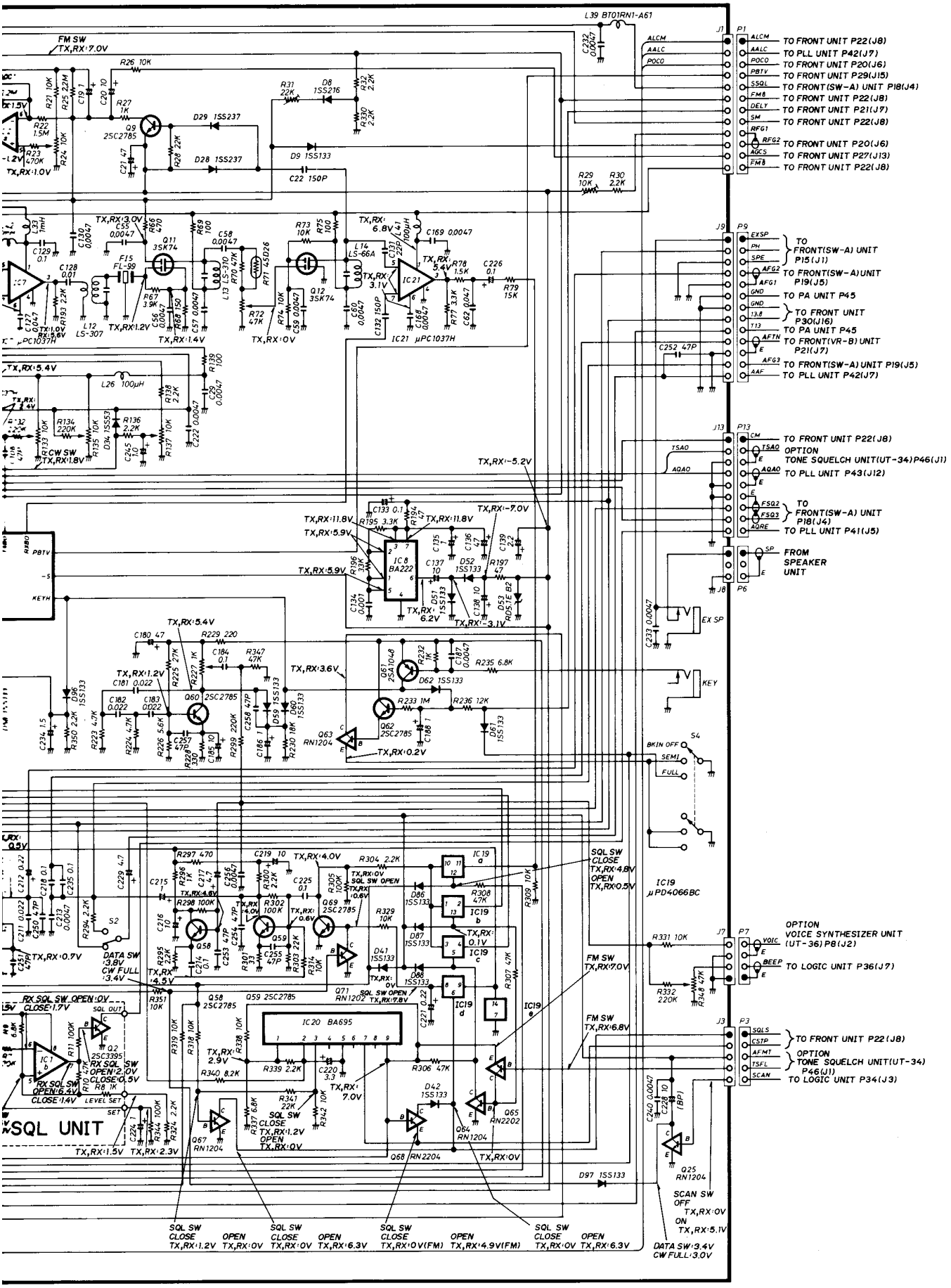

Downloaded from www.Manualslib.com manuals search engine

8-5 RF YGR UNIT

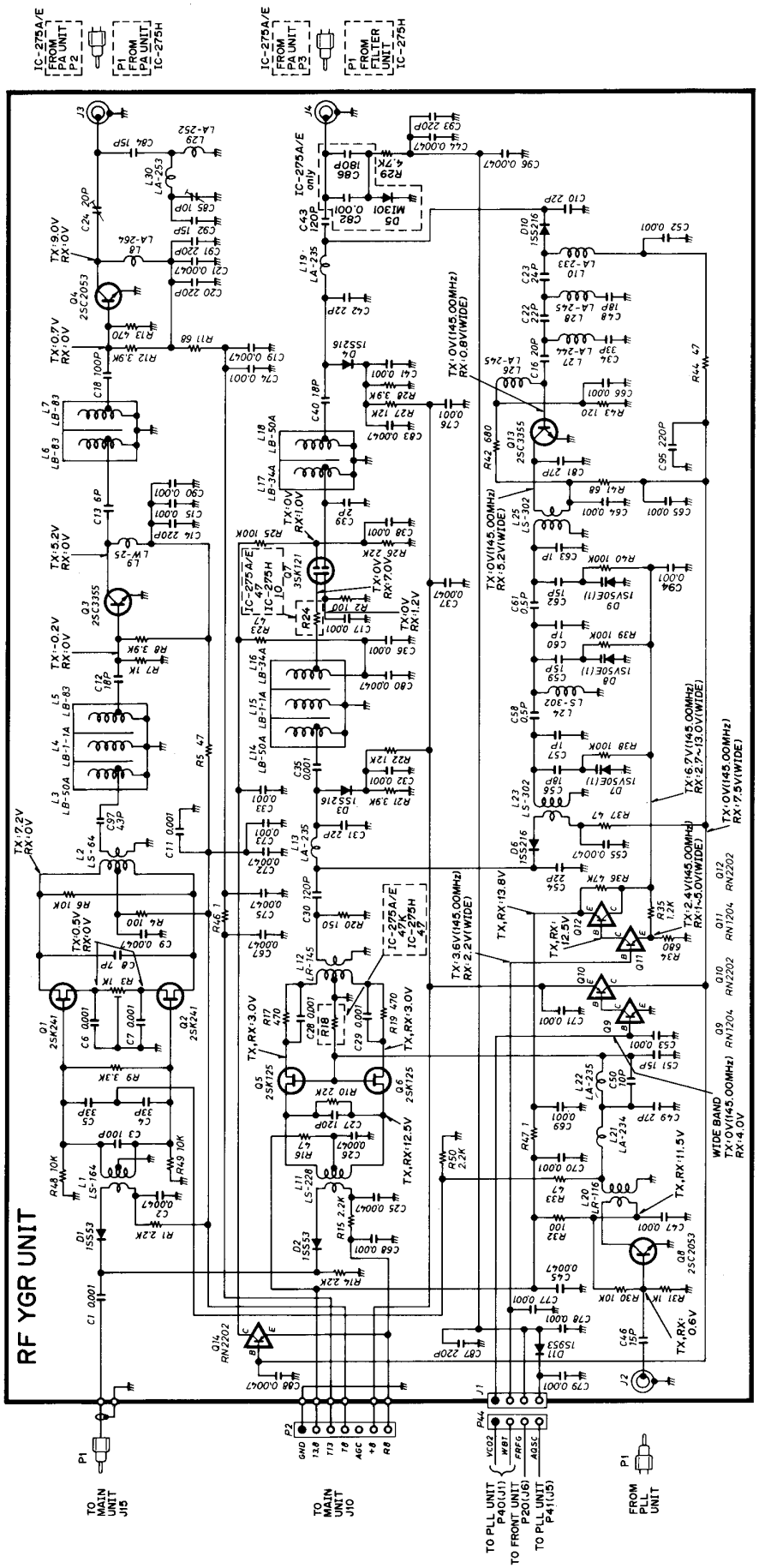

Downloaded from www.Manualslib.com manuals search engine

8-6 REG AND PA UNITS (IC-275A/E ONLY)

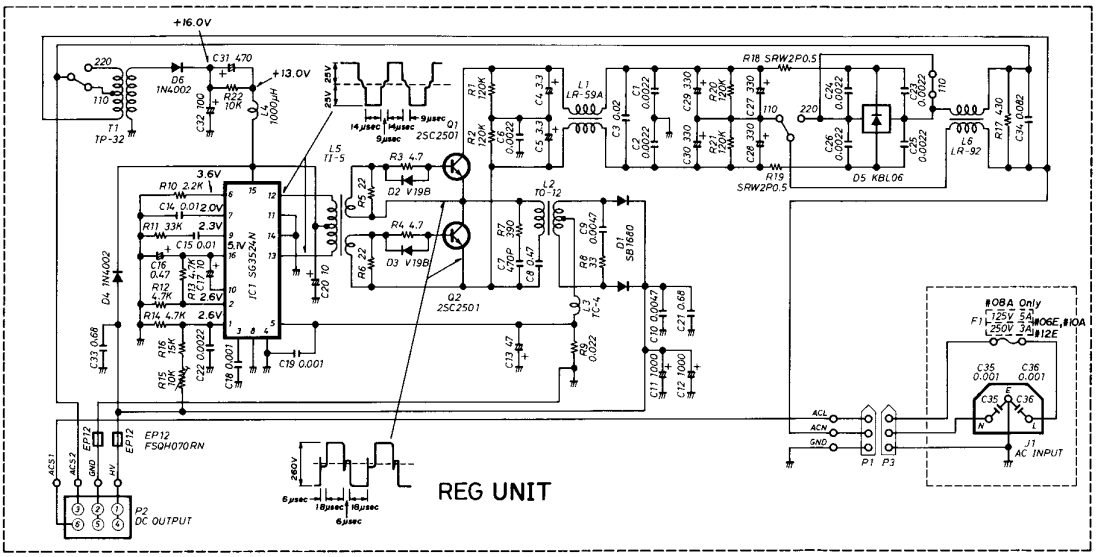

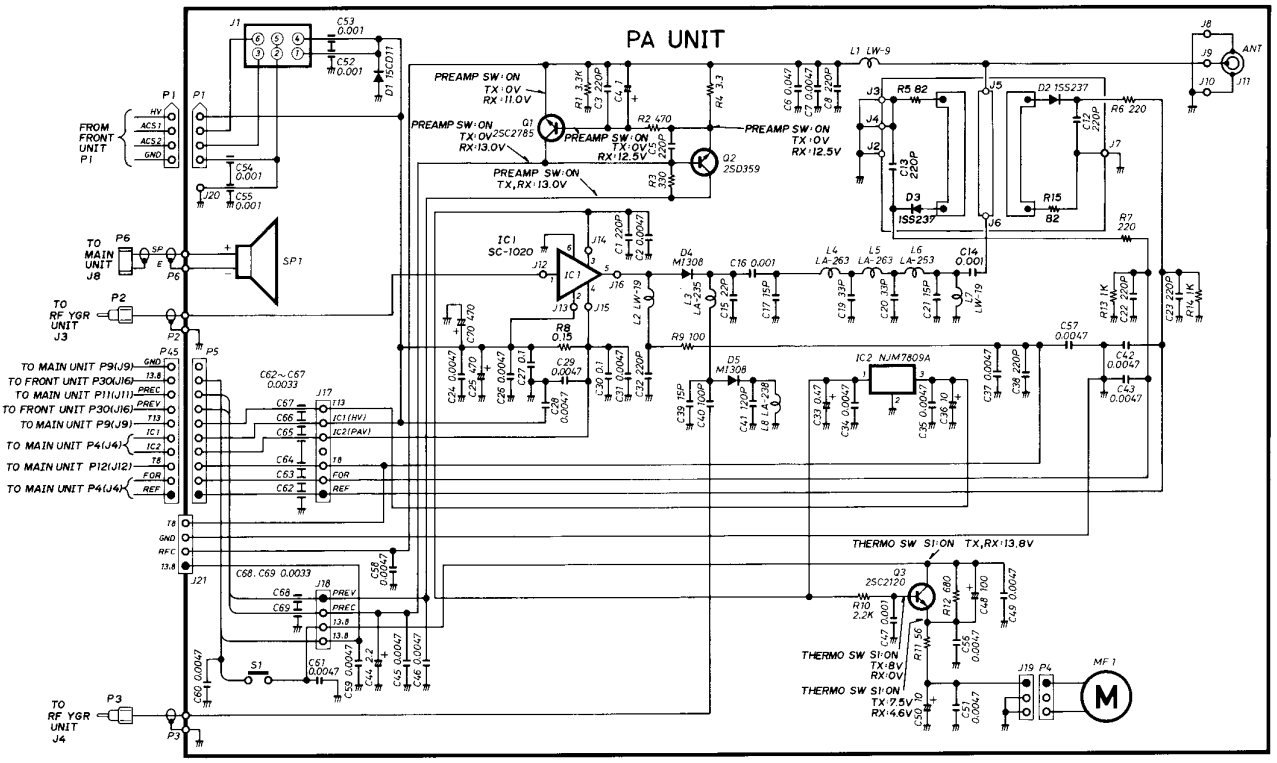

Downloaded from www.Manualslib.com manuals search engine

8-7 CTRL, PA AND FILTER UNITS (IC-275H ONLY)

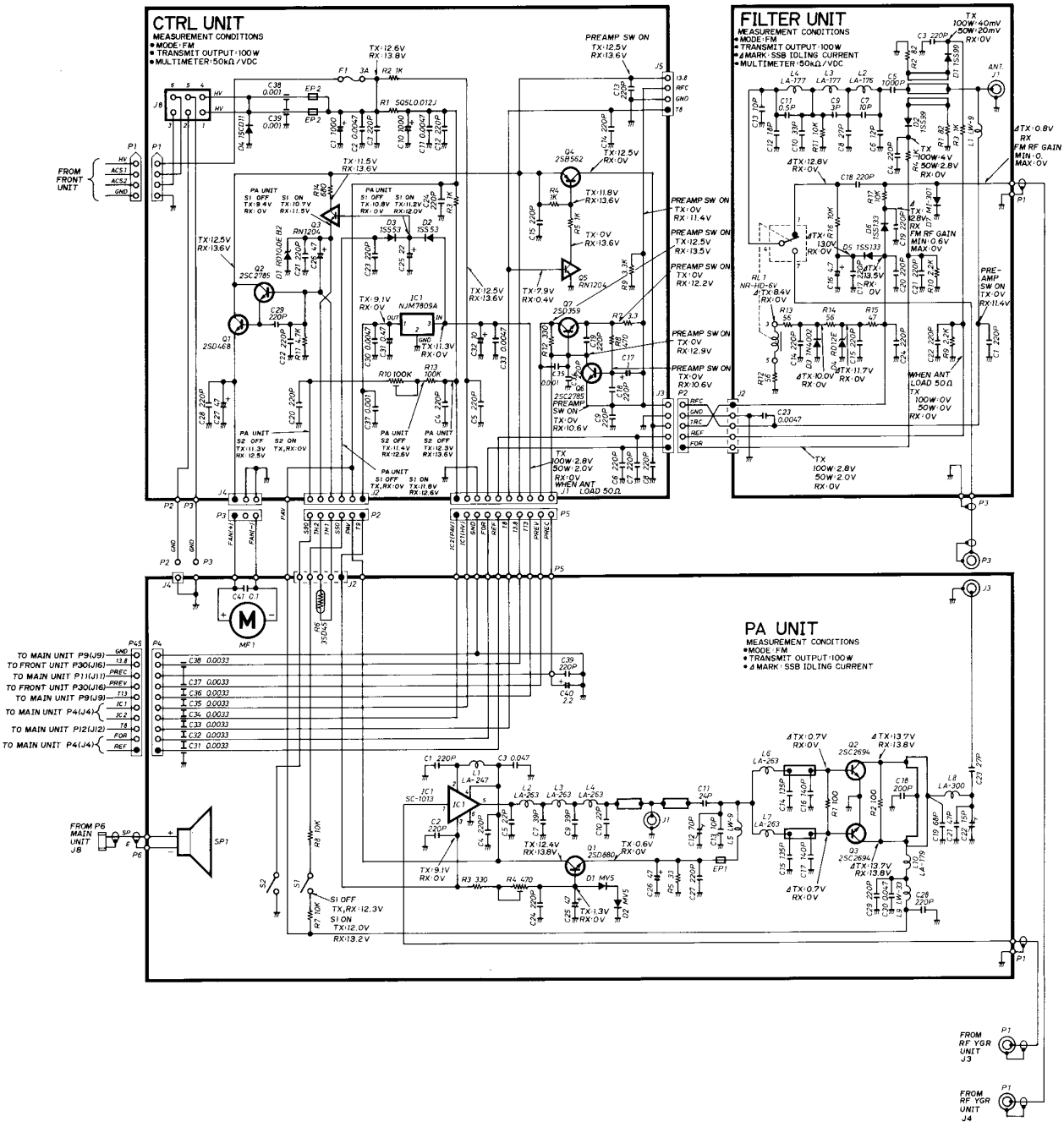

Downloaded from www.Manualslib.com manuals search engine

SECTION 9 PARTS LIST

[EF PARTS]

REF. NO.	DESCRIPTION	PART NO.
P1	Connector	EHR-12
P2	Connector	EHR-06
P3	Connector	EHR-05
P4	Connector	EHR-07
P5	Connector	EHR-04
P6	Connector	EHR-05
P7	Connector	EHR-04
P8	Connector	EHR-03
P9	Connector	EHR-13
P11	Connector	EHR-09
P12	Connector	EHR-11
P13	Connector	EHR-09
P14	Connector	EHR-03
P15	Connector	EHR-03
P16	Connector	EHR-03
P17	Connector	EHR-03
P18	Connector	EHR-07
P19	Connector	EHR-04
P20	Connector	EHR-07
P21	Connector	EHR-07
P22	Connector	EHR-12
P23	Connector	EHR-08
P24	Connector	EHR-06
P25	Connector	EHR-06
P26	Connector	EHR-06
P27	Connector	EHR-05
P28	Connector	EHR-03
P29	Connector	EHR-04
P30	Connector	EHR-10
P31	Connector	EHR-03
P32	Connector	EHR-03
P33	Connector	EHR-06
P34	Connector	EHR-10
P36	Connector	EHR-07
P37	Connector	EHR-08
P38	Connector	EHR-08
P39	Connector	EHR-06
P40	Connector	EHR-03
P41	Connector	EHR-09
P42	Connector	EHR-08
P43	Connector	EHR-05
P44	Connector	EHR-04
P45	Connector	SMP-10V-B
P46	Connector	EHR-06
P47	Connector	EHR-05

[FRONT UNIT]

REF. NO.	DESCRIPTION	PART NO.
IC1	IC	μPD4066BC
IC2	IC	μPD4011BC
IC3	IC	HD61602
Q1	Transistor	2SB562
Q2	Transistor	2SC2785 EF
Q3	Transistor	2SC2785 EF
Q4	Transistor	2SC2785 EF
Q5	Transistor	2SA1048 Y
Q6	Transistor	2SC2785 EF
Q7	Transistor	2SA1048 Y
Q8	Transistor	2SC2785 EF

[FRONT UNIT]

REF. NO.	DESCRIPTION	PART NO.	
Q10	Transistor	RN1204	
Q11	Transistor	2SC2785 EF	
D1	Diode	1SS53	
D2	Diode	1SS53	
D3	Zener	RD8.2E B2	
D4	Diode	1SS53	
D5	Diode	1SS53	
D6	Diode	1SS53	
D7	Diode	1SS53	
D8	Diode	1SS53	
D9	Diode	1SS53	
D10	Diode	1SS53	
D11	Diode	1SS53	
D12	Diode	1SS53	
D13	Diode	1SS53	
D14	Diode	1SS53	
D15	Diode	1SS53	
D16	Diode	1SS53	
D17	Diode	1SS53	
D18	Diode	1SS53	
D19	Diode	1SS53	
D20	Diode	1SS53	
D21	Diode	1SS53	
D23	Diode	1SS53	
D24	Diode	1SS53	
D26	Diode	1SS53	
D28	Diode	1SS53	
D29	Diode	1SS53	
D30	Diode	1SS53	
D31	Diode	1SS53	
D32	Diode	1SS53	
D33	Diode	1SS53	
D34	Diode	1SS133	
D35	Diode	1SS133	
D36	Diode	1SS53	
D37	Diode	1SS53	
D39	Diode	1SS53	
D40	Diode	1SS53	
D41	Diode	1SS53	
D42	Diode	1SS53	
D43	Diode	1SS53	
D44	Diode	1SS53	
D45	Diode	1SS53	
	(IC-275A/E #12E only)		
	(IC-275H #05H only)		
D46	Diode	1SS53	
D47	Diode	1SS216	
L1	Coil	BT01RN1-A61	
L2	Coil	BT01RN1-A61	
R1	Resistor	47kΩ	R20
R2	Resistor	47kΩ	R20
R3	Resistor	100Ω	R50X
R4	Resistor	100Ω	R50X
R5	Resistor	5.6kΩ	ELR20
R6	Resistor	1kΩ	R20
R7	Resistor	1kΩ	ELR20
R9	Variable Resistor	10kΩB	RK0971110
R10	Resistor	1kΩ	R20
R11	Variable Resistor	10kΩB	RK0971110
R12	Resistor	1kΩ	R20
R13	Variable Resistor	10kΩB/1kΩB	RK097121T
R14	Resistor	4.7kΩ	R20
R15	Resistor	3.3kΩ	R20
R16	Variable Resistor	10kΩB	RK097111T

Downloaded from www.Manualslib.com manuals search engine

[FRONT UNIT]

REF. NO.	DESCRIPTION	PART NO.		
R17	Variable Resistor	10kΩB×2/10kΩA	RK1242320	
R18	Trimmer	4.7kΩ	RH0651CS3J2KA	
R19	Resistor	470Ω	R20	
R20	Variable Resistor	10kΩA	RK097111T	
R21	Variable Resistor	1MΩB	RK097111T	
R22	Resistor	47kΩ	R20	
R23	Variable Resistor	10kΩB	RK097111T	
R24	Resistor	100Ω	ELR20	
R25	Resistor	100Ω	ELR20	
R26	Resistor	330kΩ	R20	
R27	Resistor	10kΩ	R20	
R28	Resistor	10kΩ	R20	
R29	Resistor	47kΩ	R20	
R30	Resistor	2.2kΩ	R20	
R31	Resistor	4.7kΩ	R20	
R32	Resistor	47kΩ	R20	
R33	Resistor	47kΩ	R20	
R34	Resistor	47kΩ	R20	
R35	Resistor	100kΩ	ELR20	
R36	Resistor	120kΩ	ELR20	
R37	Resistor	560kΩ	ELR20	
R38	Resistor	1MΩ	ELR20	
R39	Resistor	100kΩ	ELR20	
R40	Resistor	120kΩ	ELR20	
R41	Resistor	560kΩ	ELR20	
R42	Resistor	1MΩ	ELR20	
R43	Resistor	1kΩ	R20	
R44	Resistor	1kΩ	R20	
R45	Resistor	47kΩ	ELR20	
R46	Resistor	47kΩ	ELR20	
R47	Resistor	47kΩ	ELR20	
R49	Resistor	47kΩ	ELR20	
R50	Resistor	4.7kΩ	R20	
C1	Ceramic	0.001μF	50V	
C2	Ceramic	0.001μF	50V	
C3	Ceramic	0.001μF	50V	
C4	Ceramic	0.001μF	50V	
C5	Ceramic	0.001μF	50V	
C6	Ceramic	0.001μF	50V	
C7	Ceramic	0.001μF	50V	
C8	Electrolytic	2.2μF	50V	MS5
C9	Ceramic	0.001μF	50V	
C10	Ceramic	0.001μF	50V	
C11	Barrier Layer	0.01μF	25V	
C12	Ceramic	0.0047μF	50V	
C13	Tantalum	1μF	35V	DN
C14	Tantalum	1μF	35V	DN
J1	Connector	B03B-EH-S		
J2	Connector	B03B-EH-S		
J3	Connector	B03B-EH-S		
J4	Connector	B07B-EH-S		
J5	Connector	B04B-EH-S		
J6	Connector	S07B-EH-S		
J7	Connector	S07B-EH-S		
J8	Connector	B13B-EH-S		
J9	Connector	B08B-EH-S		
J10	Connector	B06B-EH-S		
J11	Connector	B06B-EH-S		
J12	Connector	B06B-EH-S		
J13	Connector	B05B-EH-S		
J14	Connector	B03B-EH-S		
J15	Connector	B04B-EH-S		
J16	Connector	B10B-EH-S		
J17	Connector	B03B-EH-S		
J18	Connector	HLJ4815-01-030		
J19	Connector	FM214-8SS (P)		
P1	Connector	1490P-1		

[FRONT UNIT]

REF. NO.	DESCRIPTION	PART NO.
DS1	LCD	LP246CH-A
DS2	LED	SLP-175B-50
DS3	LED	SLP-275B-50
DS4	Lamp	HRS-7219A-Y2 30
DS5	Lamp	HRS-7219A-Y2 30
DS6	Lamp	HRS-7219A-Y2 30
DS7	Lamp	HRS-7219A-Y2 30
ME1	Meter	M504
S1	Switch	SPPH23079A (S.RF/C.ALC)
S2	Switch	SDDSA3159A (POWER)
S3	Switch	SPPH23079A (NOTCH)
S4	Switch	SPPH23079A (XMIT)
S5	Switch	SPPH23079A (NB)
S6	Switch	SPPH23079A (PRE AMP)
S7	Switch	SPPH23079A (COMP)
S8	Switch	SPPH23079A (AGC)
S10	Switch	SPPH23078A (CALL)
S11	Switch	SPPH15060A (VFO)
S12	Switch	SPPH23078A (MEMO)
S13	Switch	SPPH23078A (A=B)
S14	Switch	SPPH23078A (MW)
S15	Switch	SPPH23078A (M ▶ VFO)
S16	Switch	SPPH23078A (MEMO CL)
S17	Switch	SPPH23078A (SPLIT)
S18	Switch	SPPH23078A (RIT ON/OFF)
S19	Switch	SPPH23078A (RIT-CL)
S20	Switch	SPPH23078A (SCAN)
S21	Switch	SPPH23078A (SKIP)
S22	Switch	SPPH15060A (CHECK)
S23	Switch	SPPH23078A (SPEECH)
S24	Switch	SPPH15060A (T. SQL)
S25	Switch	SRBM1L011A (MEMO CH)
S26	Switch	SPPH23078A (LSB)
S27	Switch	SPPH23078A (FM)
S28	Switch	SPPH23078A (USB)
S29	Switch	SPPH23078A (CW/N)
S30	Switch	SPPH23078A (DATA)
S31	Switch	SPPH15060A (SET)
S32	Switch	SPPH15060A (DUP)
S33	Switch	SPPH15060A (TONE)
S34	Switch	SPPH23079A (LOCK)
S35	Switch	SPPH23079A (MODE-S)
S36	Switch	SPPH15061A (MHz)
S37	Switch	SPPH15061A (TS)
S38	Rotary Switch	LA22402 (RIT)
EP1	P.C. Board	B-1188B
EP2	P.C. Board	B-1189A
EP3	P.C. Board	B-1190
EP4	P.C. Board	B-1031A
EP5	P.C. Board	B-1227B
EP6	P.C. Board	B-1245A
W6	Jumper	JPW-02A
W7	Jumper	JPW-02A
W8	Jumper	JPW-02A
W9	Jumper	JPW-02A
W10	Jumper	JPW-02A

Downloaded from www.Manualslib.com manuals search engine

[SENSOR UNIT]

REF. NO.	DESCRIPTION	PART NO.
Q1	Photo	IS-433
Q2	Photo	IS-433
Q3	Transistor	RN1204
Q4	Transistor	RN1204
R1	Resistor	220Ω ELR20
C1	Barrier Layer	0.01μF 25V UAT06W 103K
P1	Connector	EHR-06
DS1	LED	GL-430
DS2	LED	GL-430
EP1	P.C. Board	B-1016C

[LOGIC UNIT]

REF. NO.	DESCRIPTION	PART NO.
IC1	IC	μPD71055C
IC2	IC	HM6116LP3L
IC3	IC	SC-1079
IC4	IC	HD64B180ROP
IC5	IC	TC74HC244
IC6	IC	TC74HC244
IC7	IC	TC4510
IC8	IC	S-7116A
IC9	IC	μPD4094BC
IC10	IC	TA78L005AP
IC11	IC	TC74HC32
IC12	IC	TC74HC32
IC13	IC	TC74HC00
IC14	IC	μPD4001BC
IC15	IC	μPD4011BC
IC16	IC	μPD4011BC
IC17	IC	μPD4069UBC
IC18	IC	μPD4011BC
IC19	IC	μPD4001BC
Q1	Transistor	2SC2785 EF
Q2	Transistor	2SC2785 EF
Q3	Transistor	2SC2785 EF
Q4	Transistor	2SC2785 EF
Q5	Transistor	2SC2785 EF
Q6	Transistor	2SC2785 EF
Q7	Transistor	2SC2785 EF
Q8	Transistor	RN1204
D1	Diode	1SS53
D2	Diode	1S953
D3	Diode	1S953
D4	Diode	1S953
D5	Zener	RD5.1E B2
D6	Zener	RD3.0E B2
D7	Diode	1SS53
D8	Diode	1SS53
D9	Diode	1SS53
D10	Diode	1SS53
D11	Diode	1SS53
D12	Diode	1SS53
D13	Diode	1SS53
D14	Diode	1SS53

[LOGIC UNIT]

REF. NO.	DESCRIPTION	PART NO.
D15	Diode	1SS53
D16	Diode	1SS53
D17	Diode	1SS53
D18	Diode	1SS53
D19	Diode	1SS53
D20	Diode	1SS53
	(IC-275A/E	#08A, #12E only)
	(IC-275H	#03H, #05H only)
D21	Diode	1SS53
	(IC-275A/E	#10A, #12E only)
	(IC-275H	#04H, #05H only)
D22	Diode	1SS53
	(IC-275A/E	#06E only)
	(IC-275H	#02H only)
D24	Diode	1SS53
	(IC-275A/E	#06E, #12E only)
	(IC-275H	#02H, #05H only)
D26	Diode	1SS53
D27	Diode	1SS53
D30	Diode	1SS53
D31	Diode	1SS53
D32	Diode	1SS53
D33	Diode	1SS53
D34	Diode	1SS53
D35	Diode	1SS53
D36	Diode	1SS53
D37	Diode	1SS53
D38	Diode	1SS53
D39	Diode	1SS133
D40	Diode	1SS133
D41	Diode	1SS133
D42	Diode	1SS53
D43	Diode	1SS53
	(IC-275A/E	#08A, #10A, #12E only)
	(IC-275H	#03H, #04H, #05H only)
D44	Diode	1SS53
	(IC-275A/E	#06, #10A, #12E only)
	(IC-275H	#03H, #04H, #05H only)
X1	Crystal	RF-4A3 FAA
X2	Crystal	RF-4A3 FAF (9.2708MHz)
R1	Resistor	47kΩ R20
R2	Resistor	100Ω ELR20
R3	Resistor	47kΩ ELR20
R4	Trimmer	2.2kΩ RH0651CJ3J0CA
R5	Resistor	5.6kΩ ELR20
R6	Resistor	2.7kΩ ELR20
R7	Resistor	2.7kΩ ELR20
R8	Resistor	1MΩ ELR20
R9	Resistor	10kΩ ELR20
R10	Resistor	5.6kΩ ELR20
R11	Resistor	1kΩ R20
R12	Resistor	10kΩ R20
R13	Resistor	4.7kΩ R20
R14	Resistor	1.5kΩ R20
R15	Resistor	270Ω R20
R16	Resistor	47kΩ R20
R17	Resistor	100kΩ ELR20
R18	Resistor	1MΩ R20
R19	Resistor	1MΩ ELR20
R20	Resistor	100kΩ ELR20
R21	Resistor	47kΩ R20
R22	Resistor	47kΩ ELR20
R23	Resistor	10kΩ R20
R24	Resistor	47kΩ ELR20
R25	Resistor	47kΩ ELR20
R26	Resistor	47kΩ R20
R27	Resistor	10kΩ R20
R28	Resistor	3.3MΩ ELR25
R29	Resistor	10kΩ R20
R30	Resistor	10kΩ ELR20
R31	Resistor	47kΩ R20

Downloaded from www.Manualslib.com manuals search engine

[LOGIC UNIT]

REF. NO.	DESCRIPTION	PART NO.		
R32	Resistor	47kΩ	R20	
R33	Resistor	47kΩ	R20	
R34	Resistor	47kΩ	R20	
R35	Resistor	47kΩ	R20	
R36	Resistor	47kΩ	R20	
R37	Resistor	47kΩ	R20	
R38	Resistor	47kΩ	R20	
R39	Resistor	47kΩ	R20	
R40	Resistor	47kΩ	ELR20	
R41	Resistor	47kΩ	ELR20	
R42	Resistor	47kΩ	ELR20	
R43	Resistor	47kΩ	R20	
R44	Array	10kΩ	RMX-8	
R46	Resistor	10kΩ	ELR20	
R47	Resistor	22Ω	R50X	
R48	Resistor	10kΩ	ELR20	
R49	Array	10kΩ	RMX-8	
R50	Resistor	47kΩ	ELR20	
C1	Electrolytic	0.33μF	50V	MS7
C2	Barrier Layer	0.1μF	16V	
C3	Barrier Layer	0.1μF	16V	
C4	Ceramic	22pF	50V	
C5	Ceramic	22pF	50V	
C6	Barrier Layer	0.0047μF	25V	
C7	Barrier Layer	0.0047μF	25V	
C8	Barrier Layer	0.0047μF	25V	
C9	Ceramic	0.001μF	50V	
C10	Ceramic	47pF	50V	
C11	Barrier Layer	0.01μF	25V	
C12	Electrolytic	0.47μF	50V	MS7
C13	Barrier Layer	0.01μF	25V	
C14	Ceramic	30pF	50V	
C15	Ceramic	30pF	50V	
C16	Ceramic	0.001μF	50V	
C17	Ceramic	0.001μF	50V	
C18	Ceramic	100pF	50V	
C19	Ceramic	0.001μF	50V	
C20	Ceramic	0.001μF	50V	
C21	Ceramic	0.001μF	50V	
C22	Ceramic	0.001μF	50V	
C23	Ceramic	100pF	50V	
C24	Electrolytic	0.47μF	50V	MS7
C25	Electrolytic	47μF	16V	MS7
C26	Barrier Layer	0.01μF	25V	
C27	Ceramic	0.01μF	50V	FZ
C28	Ceramic	0.01μF	50V	FZ
C29	Barrier Layer	0.01μF	25V	
C30	Barrier Layer	0.01μF	25V	
C31	Ceramic	0.01μF	50V	FZ
C32	Ceramic	0.01μF	50V	FZ
C33	Barrier Layer	0.01μF	25V	
C34	Tantalum	1μF	16V	DA
C35	Ceramic	0.01μF	50V	FZ
C37	Tantalum	1μF	16V	DA
C38	Tantalum	1μF	16V	DA
C39	Tantalum	1μF	16V	DA
C40	Ceramic	0.01μF	50V	FZ
C41	Ceramic	0.01μF	50V	FZ
C42	Barrier Layer	0.01μF	25V	
C43	Ceramic	0.001μF	50V	
C44	Barrier Layer	0.01μF	25V	
J1	Connector	B03B-EH-S		
J2	Connector	B06B-EH-S		
J3	Connector	B10B-EH-S		
J4	Connector	B12B-EH-S		
J5	Connector	TLB-P05H-B1		
J6	Connector	TLB-P02H-B1		
J7	Connector	B07B-EH-S		
J8	Connector	B08B-EH-S		
J9	Connector	B08B-EH-S		
J10	Connector	B06B-EH-S		

[LOGIC UNIT]

REF. NO.	DESCRIPTION	PART NO.
J11	Connector	B06B-EH-S
P1	Connector	EHR-03
P2	Connector	EHR-05
S1	Switch	SSSS31124A
S3	Switch	SCS-10A
BT1	Lithium Battery	BR2032-1T2
EP1	P.C. Board	B-1187C
EP2	Ferrite Bead	FSQH070RN
W3	Jumper	JPW-02A
W4	Jumper	JPW-02A

[PLL UNIT]

REF. NO.	DESCRIPTION	PART NO.
IC1	IC	NJM4560DD
IC2	IC	MC145158P1
IC3	IC	μPB555C
IC4	IC	SN74LS90N
IC5	IC	μA78M08UC
IC6	IC	TA78L005AR
IC7	IC	ND487C1-3R
Q1	FET	2SK125
Q2	Transistor	RN1204
Q3	Transistor	RN1204
Q4	Transistor	RN2204
Q5	Transistor	RN1202
Q6	FET	2SK192A GR
Q7	Transistor	2SC763 C
Q8	Transistor	2SC763 C
Q9	Transistor	2SC2026
Q11	Transistor	2SC2668 O
Q13	Transistor	2SC763 C
Q15	Transistor	2SC2668 O
Q17	Transistor	2SC383TM
Q18	Transistor	2SC763 C
Q19	Transistor	2SC763 C
Q20	FET	3SK74 M
Q21	Transistor	2SC763 C
Q25	FET	2SK192A GR
Q26	Transistor	2SC763 C
Q27	Transistor	2SC763 C
Q29	Transistor	RN1202
D1	Diode	1SS53
D2	Varicap	1SV50E (1)
D3	Varicap	1SV50E (1)
D4	Diode	1SS53
D5	Zener	RD5.1E B2
D6	Diode	1SS53
D9	Varicap	1SV50E (1)
D10	Varicap	1SV50E (1)
D11	Varicap	1SV50E (1)
D12	Diode	1SS53
D13	Diode	1SS53
D14	Diode	1SS53

Downloaded from www.Manualslib.com manuals search engine

[PLL UNIT]

REF. NO.	DESCRIPTION	PART NO.
X1	Crystal	CR21 (30.72MHz)
L1	Coil	LAL03NA 3R3K
L2	Coil	LW-25
L3	Coil	LAL02KR 1R2M
L4	Coil	LB-132
L5	Coil	LAL02KR 101K
L6	Coil	LS-145
L7	Coil	LA-266
L8	Coil	LA-257
L9	Coil	LA-258
L10	Coil	LA-246
L11	Coil	LAL03NA 102K
L12	Coil	LAL03NA 102K
L14	Coil	LA-266
L15	Coil	LB4 R15
L16	Coil	LA-258
L17	Coil	LAL02KR 1R2M
L18	Coil	LAL02KR R56M
L19	Coil	LA-267
L21	Coil	LAL03NA 100K
L22	Coil	LS-94
L23	Coil	LW-25
L24	Coil	LS-112
L25	Coil	LS-112
L26	Coil	LAL03NA 151K
L27	Coil	LAL03NA 151K
L28	Coil	LR-79
L29	Coil	LB-135
L30	Coil	LW-25
L31	Coil	LS-112
L32	Coil (IC-275A/E)	BT01RN-A61
L32	Coil (IC-275H)	BT01RN1-A61
L33	Coil	LAL03NA 101K
L34	Coil	BT01RN1-A61
L35	Coil	BT01RN1-A61
L36	Coil	BT01RN1-A61
L38	Coil	BT01RN1-A61
L39	Coil	BT01RN1-A61
L40	Coil	BT01RN1-A61
L42	Coil	BT01RN1-A61
L44	Coil	BT01RN1-A61
L45	Coil	BT01RN1-A61
L46	Coil	BT01RN1-A61
L47	Coil	BT01RN1-A61
L48	Coil	BT01RN1-A61
L49	Coil	BT01RN1-A61
L50	Coil	BT01RN1-A61
L51	Coil	LB-203
L52	Coil	LAL02KR 101K
L54	Coil	LA-248
L55	Coil	LA-232
L56	Coil	LA-232
L57	Coil	LA-233
L58	Coil	LA-248
L59	Coil	LA-267
L61	Coil	BT01RN1-A61
L62	Coil	BT01RN1-A61
L63	Coil	BT01RN1-A61
L64	Coil	BT01RN1-A61
L65	Coil	BT01RN1-A61
L66	Coil	LAL03NA 101K
L67	Coil	LAL03NA 1R0M
L68	Coil	LAL03NA R22M
L69	Coil	LAL03NA 1R0M
L70	Coil	LR-116
L71	Coil	LR-116
L72	Coil	LAL03NA R68M
L73	Coil	LAL03NA 100K
L74	Coil	LAL03NA 100K
L75	Coil	LAL03NA 101K
L76	Coil	LAL03NA 2R2M

[PLL UNIT]

REF. NO.	DESCRIPTION	PART NO.	
R1	Resistor	47Ω	ELR20
R2	Resistor	220Ω	ELR20
R6	Resistor	470kΩ	ELR20
R7	Resistor	100Ω	ELR20
R8	Resistor	100Ω	ELR20
R9	Resistor	220Ω	ELR20
R10	Resistor	5.6kΩ	ELR20
R11	Resistor	5.6kΩ	ELR20
R12	Resistor	220Ω	R20
R13	Resistor	47Ω	R20
R14	Resistor	4.7kΩ	ELR20
R15	Resistor	100Ω	R20
R16	Resistor	2.2MΩ	R20
R17	Resistor	470Ω	ELR20
R19	Resistor	470kΩ	R20
R20	Resistor	220Ω	ELR20
R21	Resistor	1.2kΩ	ELR20
R22	Resistor	100Ω	ELR20
R23	Resistor	1.2kΩ	ELR20
R24	Resistor	100Ω	ELR20
R25	Resistor	120Ω	ELR20
R26	Resistor	120Ω	ELR20
R27	Resistor	1kΩ	ELR20
R31	Resistor	1.5kΩ	R20
R32	Resistor	100Ω	ELR20
R33	Resistor	1.5kΩ	ELR20
R34	Resistor	15kΩ	R20
R35	Resistor	15kΩ	R20
R41	Resistor	220Ω	ELR20
R43	Resistor	6.8kΩ	ELR20
R44	Resistor	39kΩ	ELR20
R45	Resistor	100Ω	ELR20
R50	Resistor	100Ω	ELR20
R51	Resistor	470Ω	ELR20
R52	Resistor	5.6kΩ	ELR20
R53	Resistor	220Ω	ELR20
R57	Resistor	1kΩ	R20
R58	Resistor	15kΩ	R20
R64	Resistor	47Ω	ELR20
R67	Resistor	470Ω	ELR20
R68	Resistor	4.7kΩ	R20
R69	Resistor	10kΩ	ELR20
R70	Resistor	220Ω	R20
R71	Resistor	4.7kΩ	R20
R72	Resistor	1kΩ	ELR20
R73	Resistor	22kΩ	ELR20
R74	Resistor	220Ω	R20
R75	Resistor	47Ω	ELR20
R76	Resistor	1kΩ	ELR20
R77	Resistor	47kΩ	ELR20
R78	Resistor	1kΩ	R20
R79	Resistor	270Ω	R20
R80	Resistor	330Ω	R20
R81	Resistor	100Ω	R20
R82	Resistor	1kΩ	R20
R83	Resistor	22kΩ	ELR20
R84	Resistor	470Ω	ELR20
R85	Resistor	5.6kΩ	ELR20
R86	Resistor	220Ω	ELR20
R91	Resistor	2.2kΩ	R20
R93	Resistor	100kΩ	ELR20
R94	Resistor	100kΩ	ELR20
R95	Resistor	680Ω	ELR20
R96	Resistor	100Ω	ELR20
R97	Resistor	1.2kΩ	ELR20
R98	Resistor	5.6kΩ	ELR20
R99	Resistor	330Ω	ELR20
R100	Resistor	100Ω	ELR20
R101	Resistor	100Ω	ELR20
R102	Resistor	1.2kΩ	ELR20
R103	Resistor	5.6kΩ	R20
R104	Resistor	100Ω	ELR20
R105	Resistor	100Ω	R20
R106	Resistor	270Ω	ELR20
R107	Resistor	18Ω	R20

Downloaded from www.Manualslib.com manuals search engine

[PLL UNIT]

REF. NO.	DESCRIPTION	PART NO.		
R108	Resistor	270Ω	R20	
R109	Resistor	1.2kΩ	ELR20	
R110	Resistor	47Ω	ELR20	
R111	Resistor	1.2kΩ	ELR20	
R117	Resistor	22kΩ	ELR20	
R118	Resistor	5.6kΩ	R20	
R121	Resistor	470Ω	R20	
R122	Resistor	2.2kΩ	ELR20	
R124	Resistor	4.7kΩ	ELR20	
R126	Resistor	270Ω	ELR20	
R127	Resistor	18Ω	ELR20	
R128	Resistor	270Ω	R20	
R129	Resistor	1kΩ	R20	
R130	Resistor	270Ω	ELR20	
R131	Resistor	18Ω	ELR20	
R132	Resistor	270Ω	ELR20	
R133	Resistor	15kΩ	R20	
R134	Resistor	1kΩ	ELR20	
R135	Resistor	10kΩ	ELR20	
R136	Resistor	10kΩ	R20	
R137	Thermistor	35D45SN		
C2	Ceramic	33pF	50V	
C3	Electrolytic	100μF	10V	
C4	Ceramic	0.0047μF	50V	
C5	Ceramic	0.0047μF	50V	
C6	Ceramic	47pF	50V	
C7	Ceramic	15pF	50V	
C8	Barrier Layer	0.0047μF	25V	
C9	Ceramic	0.0047μF	50V	
C10	Ceramic	6pF	50V	
C11	Ceramic	6pF	50V	
C12	Barrier Layer	0.0047μF	25V	
C13	Ceramic	0.0047μF	50V	
C14	Barrier Layer	0.1μF	16V	
C15	Ceramic	18pF	50V	
C16	Trimmer	6pF	CV38B0601	
C17	Ceramic	3pF	50V	UJ
C18	Ceramic	2pF	50V	CK
C19	Ceramic	10pF	50V	CH
C20	Ceramic	3pF	50V	
C22	Ceramic	3pF	50V	
C23	Ceramic	1pF	50V	
C24	Ceramic	0.0047μF	50V	
C25	Ceramic	0.0047μF	50V	
C26	Ceramic	0.0047μF	50V	
C27	Ceramic	2pF	50V	
C29	Ceramic	68pF	50V	
C30	Ceramic	3pF	50V	
C31	Ceramic	56pF	50V	
C33	Ceramic	36pF	50V	
C34	Tantalum	0.68μF	35V	DN
C35	Tantalum	0.33μF	35V	DN
C36	Ceramic	0.001μF	50V	
C39	Ceramic	0.001μF	50V	
C40	Ceramic	0.0047μF	50V	
C41	Ceramic	0.0047μF	50V	
C42	Ceramic	30pF	50V	CH
C43	Ceramic	82pF	50V	
C44	Ceramic	68pF	50V	
C45	Ceramic	68pF	50V	
C46	Ceramic	12pF	50V	
C47	Ceramic	62pF	50V	
C48	Ceramic	82pF	50V	
C49	Ceramic	62pF	50V	
C50	Ceramic	68pF	50V	
C58	Ceramic	6pF	50V	
C59	Ceramic	220pF	50V	
C61	Ceramic	2pF	50V	
C68	Ceramic	22pF	50V	
C69	Ceramic	100pF	50V	
C70	Ceramic	0.0047μF	50V	
C71	Barrier Layer	0.1μF	16V	
C72	Ceramic	5pF	50V	

[PLL UNIT]

REF. NO.	DESCRIPTION	PART NO.		
C73	Ceramic	DD106 F 103Z 50V02		
C74	Ceramic	82pF	50V	TH
C75	Ceramic	39pF	50V	CH
C76	Ceramic	0.0047μF	50V	
C78	Ceramic	12pF	50V	
C79	Ceramic	0.0047μF	50V	
C80	Barrier Layer	0.75pF	50V	
C81	Ceramic	15pF	50V	
C82	Ceramic	470pF	50V	
C83	Ceramic	0.0047μF	50V	
C84	Ceramic	39pF	50V	
C85	Ceramic	68pF	50V	
C86	Ceramic	39pF	50V	
C87	Barrier Layer	0.1μF	16V	
C88	Ceramic	0.001μF	50V	
C89	Ceramic	0.001μF	50V	
C90	Ceramic	5pF	50V	
C91	Ceramic	0.0047μF	50V	
C92	Ceramic	0.0047μF	50V	
C93	Array	0.001μF × 7	B8XC0114-32N	
C94	Array	0.001μF × 7	B8XC0114-32N	
C95	Electrolytic	47μF	16V	MS-7
C97	Barrier Layer	0.01μF	25V	
C98	Tantalum	1.5μF	35V	DN
C99	Ceramic	12pF	50V	CH
C100	Ceramic	33pF	50V	CH
C101	Ceramic	6pF	50V	CH
C102	Electrolytic	47μF	10V	
C103	Ceramic	0.0047μF	50V	
C104	Ceramic	0.0047μF	50V	
C105	Ceramic	1pF	50V	
C106	Ceramic	0.0047μF	50V	
C107	Electrolytic	100μF	10V	
C108	Ceramic	15pF	50V	
C109	Ceramic	0.0047μF	50V	
C110	Electrolytic	100μF	10V	MS7
C111	Ceramic	1pF	50V	CK
C115	Electrolytic	100μF	16V	
C116	Electrolytic	10μF	16V	
C117	Ceramic	0.0047μF	50V	
C118	Electrolytic	10μF	16V	
C119	Ceramic	0.0047μF	50V	
C120	Ceramic	0.0047μF	50V	
C121	Trimmer	6pF	CV38B0601	
C122	Ceramic	18pF	50V	CH
C123	Ceramic	3pF	50V	CJ
C124	Ceramic	0.0047μF	50V	
C125	Ceramic	0.0047μF	50V	
C126	Ceramic	0.0047μF	50V	
C127	Ceramic	12pF	50V	
C130	Ceramic	470pF	50V	
C131	Ceramic	0.5pF	50V	
C133	Electrolytic	10μF	16V	MS7
C134	Ceramic	0.0047μF	50V	
C135	Ceramic	6pF	50V	
C136	Ceramic	0.0047μF	50V	
C145	Ceramic	47pF	50V	
C146	Ceramic	0.001μF	50V	
C147	Ceramic	0.001μF	50V	
C148	Ceramic	0.0047μF	50V	
C149	Ceramic	0.0047μF	50V	
C150	Ceramic	6pF	50V	
C153	Ceramic	0.0047μF	50V	
C154	Ceramic	0.0047μF	50V	
C155	Ceramic	0.0047μF	50V	
C156	Barrier Layer	0.1μF	16V	
C158	Ceramic	0.0047μF	50V	
C159	Barrier Layer	0.1μF	16V	
C161	Barrier Layer	0.1μF	16V	
C162	Ceramic	0.0047μF	50V	
C163	Barrier Layer	0.1μF	16V	
C165	Tantalum	1μF	16V	DA
C166	Barrier Layer	0.1μF	16V	
C167	Ceramic	0.0047μF	50V	
C168	Ceramic	0.0047μF	50V	

Downloaded from www.Manualslib.com manuals search engine

[PLL UNIT]

REF. NO.	DESCRIPTION	PART NO.		
C169	Tantalum	1µF	16V	DA
C170	Barrier Layer	0.1µF	16V	
C171	Ceramic	2pF	50V	
C172	Ceramic	1pF	50V	
C173	Ceramic	1pF	50V	
C175	Electrolytic	10µF	16V	MS7
C176	Barrier Layer	0.0047µF	25V	
C177	Electrolytic	10µF	16V	MS7
C178	Ceramic	15pF	50V	
C179	Ceramic	15pF	50V	
C180	Ceramic	62pF	50V	
C181	Barrier Layer	0.1µF	16V	
C182	Ceramic	0.0047µF	50V	
C183	Ceramic	0.0047µF	50V	
C184	Ceramic	0.0047µF	50V	
C185	Ceramic	0.0047µF	50V	
C186	Barrier Layer	0.1µF	16V	
C187	Ceramic	0.0047µF	50V	
C188	Ceramic	0.0047µF	50V	
C189	Barrier Layer	0.01µF	25V	
C190	Ceramic	0.0047µF	50V	
C191	Ceramic	6pF	50V	
C192	Tantalum	0.68µF	35V	DN
C193	Ceramic	100pF	50V	
C194	Ceramic	270pF	50V	
C195	Ceramic	330pF	50V	
C196	Ceramic	220pF	50V	
C197	Ceramic	22pF	50V	UJ
C199	Ceramic	0.0047µF	50V	
C200	Ceramic	0.0047µF	50V	
C201	Ceramic	120pF	50V	
C202	Ceramic	18pF	50V	
C203	Ceramic	0.001µF	50V	
J1	Connector	B03B-EH-S		
J2	Connector	TLB-P06H-B1		
J4	Connector	TCS 5037-01-401		
J5	Connector	B09B-EH-S		
J6	Connector	TCS 4480-01-1111		
J7	Connector	B08B-EH-S		
J8	Connector	HSJ0807-01-010		
J9	Connector	TLB-P04H-B1		
J10	Connector	TLB-P05H-B1		
J11	Connector	TLB-P03H-B1		
J12	Connector	B05B-EH-S		
J13	Connector	B03B-EH-S		
P1	Connector	TMP-P01X-A1		
P2	Connector	EHR-12		
EP1	P.C. Board	B-1186E		
EP2	Ferrite Bead	FSQH070RN		
W8	Jumper	JPW-02A		
W9	Jumper	JPW-02A		
W10	Jumper	JPW-02A		

[DDS UNIT]

REF. NO.	DESCRIPTION	PART NO.
IC1	IC	SC-1051
IC2	IC	SC-1052
IC3	IC	SC-1053
IC4	IC	TC74HCT374F
IC5	IC	TC74HCT374F

[DDS UNIT]

REF. NO.	DESCRIPTION	PART NO.	
X1	Crystal	CR180	
L1	Coil	LQN5N331K	
L2	Coil	LQN5N331K	
L3	Coil	LQN5N331K	
R1	Chip	1MΩ	MCR10
R2	Chip	680Ω	MCR10
R3	Chip	2.2kΩ	MCR10
R4	Array	GF5096	
C1	Trimmer	10pF	TZB04N100BA
C2	Monolithic	33pF	GRM40 CH
C3	Monolithic	0.1µF	GRM40 F
C7	Monolithic	68pF	GRM40
C8	Monolithic	2pF	GRM40
C9	Monolithic	120pF	GRM40
C10	Monolithic	7pF	GRM40
C11	Monolithic	120pF	GRM40
C12	Monolithic	12pF	GRM40
C13	Monolithic	68pF	GRM40
C14	Monolithic	0.1µF	GRM40 F
C15	Monolithic	0.1µF	GRM40 F
C16	Monolithic	0.1µF	GRM40 F
C17	Monolithic	0.1µF	GRM40 F
C18	Monolithic	18pF	GRM40 UJ
C19	Monolithic	0.001µF	GRM40
C20	Monolithic	220pF	GRM40
J1	Connector	3022-03A	
J2	Connector	3022-06A	
EP1	P.C. Board	B-1233C	
EP2	Ferrite Bead	FSQH070RN	

[MAIN UNIT]

REF. NO.	DESCRIPTION	PART NO.
IC1	IC	µPC577H
IC2	IC	M5218L
IC3	IC	µPC1037H
IC4	IC	µPC1037H
IC5	IC	BA401
IC6	IC	MC3357P
IC7	IC	µPC1037H
IC8	IC	BA222
IC9	IC	NJM4558D
IC10	IC	M5218L
IC11	IC	µPC577H
IC12	IC	M5218L
IC13	IC	M5218L
IC14	IC	µPD4011BC
IC15	IC	µPD4011BC
IC16	IC	µA7808
IC17	IC	BA618
IC18	IC	µPC2002H
IC19	IC	µPD4066BC
IC20	IC	BA695
IC21	IC	µPC1037H
Q1	FET	2SK192A Y
Q2	Transistor	2SA1048 Y/GR
Q3	Transistor	2SC2785 EF

Downloaded from www.Manualslib.com manuals search engine

[MAIN UNIT]

REF. NO.	DESCRIPTION	PART NO.
Q4	Transistor	2SC2785 EF
Q5	Transistor	RN2202
Q6	Transistor	2SC2785 EF
Q7	Transistor	RN1204
Q8	Transistor	RN1204
Q9	Transistor	2SC2785 EF
Q10	FET	3SK74 M
Q11	FET	3SK74 M
Q12	FET	3SL74 M
Q13	FET	3SK74 M
Q14	Transistor	2SC2785 EF
Q15	Transistor	RN2202
Q16	Transistor	RN2202
Q17	Transistor	2SC2785 EF
Q18	Transistor	2SC2785 EF
Q19	Transistor	2SC2785 EF
Q20	Transistor	RN1204
Q21	Transistor	2SC2785 EF
Q22	Transistor	RN2204
Q23	Transistor	2SC2785 EF
Q25	Transistor	RN1204
Q26	Transistor	RN1204
Q27	Transistor	2SC2785 EF
Q28	Transistor	2SC2785 EF
Q29	Transistor	RN1204
Q30	Transistor	RN1204
Q31	Transistor	RN1204
Q32	Transistor	2SC2785 EF
Q33	Transistor	2SC2785 EF
Q34	Transistor	2SC1571 G
Q35	Transistor	2SC2785 EF
Q36	Transistor	RN1202
Q37	Transistor	RN1202
Q38	Transistor	RN1202
Q39	Transistor	2SC2785 EF
Q40	Transistor	2SC2785 EF
Q41	Transistor	2SC2785 EF
Q42	Transistor	2SC2785 EF
Q43	Transistor	2SA1048 Y/GR
Q44	Transistor	2SC2785 EF
Q45	Transistor	2SC2785 EF
Q46	Transistor	2SD468 C
Q47	Transistor	RN1204
Q48	Transistor	RN1204
Q49	Transistor	RN1202
Q50	Transistor	2SD468 C
Q51	Transistor	RN1202
Q52	Transistor	2SC2785 EF
Q53	Transistor	2SC2785 EF
Q54	Transistor	2SD468 C
Q55	Transistor	2SD468 C
Q56	Transistor	RN1202
Q57	Transistor	2SB596 O
Q58	Transistor	2SC2785 EF
Q59	Transistor	2SC2785 EF
Q60	Transistor	2SC2785 EF
Q61	Transistor	2SA1048 Y/GR
Q62	Transistor	2SC2785 EF
Q63	Transistor	RN1204
Q64	Transistor	RN1204
Q65	Transistor	RN2202
Q66	Transistor	RN1204
Q67	Transistor	RN1204
Q68	Transistor	RN2204
Q69	Transistor	2SC2785 EF
Q70	Transistor	RN2204
Q71	Transistor	RN1202
Q72	Transistor	RN2202
D1	Diode	1K60
D2	Diode	1K60
D3	Diode	1SS53
D4	Varicap	FC52 M
D5	Diode	1SS133

[MAIN UNIT]

REF. NO.	DESCRIPTION	PART NO.
D6	Diode	1SS133
D7	Diode	1SS133
D8	Diode	1SS216
D9	Diode	1SS133
D10	Diode	1SS53
D11	Diode	1SS53
D12	Diode	1SS53
D13	Diode	1SS53
D14	Diode	1SS53
D15	Diode	1SS53
D16	Diode	1SS53
D17	Diode	1SS53
D18	Diode	1SS53
D19	Diode	1SS53
D20	Diode	1SS53
D21	Diode	1SS53
D22	Diode	1SS53
D23	Diode	1SS53
D24	Diode	1SS53
D25	Diode	1SS133
D26	Diode	1SS53
D27	Diode	1SS53
D28	Diode	1SS237
D29	Diode	1SS237
D32	Diode	1SS53
D33	Diode	1SS53
D34	Diode	1SS53
D35	Varicap	1SV50E (1)
D36	Diode	1SS133
D37	Diode	1SS53
D38	Diode	1SS53
D39	Diode	1SS53
D40	Varicap	1SV50E (1)
D41	Diode	1SS133
D42	Diode	1SS133
D43	Zener	RD6.2E B2
D44	Diode	1SS237
D45	Diode	1SS237
D46	Diode	1SS133
D47	Diode	1SS53
D48	Diode	1SS53
D49	Diode	1SS133
D50	Diode	1SS133
D51	Diode	1SS133
D52	Diode	1SS133
D53	Zener	RD5.1E B2
D54	Diode	1SS216
D55	Diode	1SS216
D56	Diode	1SS237
D57	Diode	1SS237
D58	Diode	1SS133
D59	Diode	1SS133
D60	Diode	1SS133
D61	Diode	1SS133
D62	Diode	1SS133
D63	Diode	1SS133
D64	Diode	1SS133
D65	Zener (IC-275A/E)	MZ303
D65	Zener (IC-275H)	RD5.1E B2
D66	Diode (IC-275A/E)	1SS133
D66	Diode (IC-275H)	1SS99
D67	Diode	1SS133
D68	Diode	1SS133
D69	Diode	1SS133
D70	Diode	1SS133
D71	Diode	1SS133
D72	Diode	1SS133
D73	Diode	1SS133
D74	Diode	1SS133
D75	Diode	1SS133
D76	Diode	1SS133

Downloaded from www.Manualslib.com manuals search engine

[MAIN UNIT]

REF. NO.	DESCRIPTION	PART NO.
D77	Diode	1SS133
D78	Zener	RD3.9E B2
D79	Diode	1SS133
D80	Diode	1SS133
D81	Diode	1SS133
D82	Diode	1SS133
D83	Diode	1SS133
D84	Diode	1SS133
D85	Diode	1SS133
D86	Diode	1SS133
D87	Diode	1SS133
D88	Diode	1SS133
D89	Diode	1SS53
D90	Diode	1SS133
D91	Diode	1SS133
D92	Diode	1SS133
D93	Diode	1SS133
D94	Diode	1SS133
D95	Diode	1SS133
D96	Diode	1SS133
D97	Diode	1SS133
D98	Diode	1SS133
D99	Diode	1SS133
FI1	Monolithic	FL-28
FI2	Monolithic	FL-31
FI3	Ceramic	FL-65
FI4	Ceramic	CFW455 E
FI5	Monolithic	FL-99
X1	Crystal	HC18/U 10.7500MHz
X2	Crystal	HC43/U 10.2950MHz
X3	Crystal	HC18/U 10.7500MHz
X4	Crystal	HC18/U 10.7515MHz
L1	Coil	LS-66A
L2	Coil	LS-66A
L4	Coil	LAL03NA 101K
L5	Coil	LAL03NA 150K
L6	Coil	LS-164
L7	Coil	LS-164
L8	Coil	LS-303
L9	Coil	LS-303
L10	Coil	LS-66A
L11	Coil	LAL03NA 221K
L12	Coil	LS-307
L13	Coil	LS-310
L14	Coil	LS-66A
L15	Coil	LS-66A
L16	Coil	LS-66A
L17	Coil	LAL03NA 101K
L18	Coil	LAL03NA 101K
L19	Coil	LS-256
L20	Coil	LB4 100J
L21	Coil	LAL03NA 100K
L22	Coil	LAL03NA 100K
L23	Coil	LS-121
L24	Coil	LAL03NA 101K
L25	Coil	LAL03NA 100K
L26	Coil	LAL03NA 101K
L27	Coil	LAL03NA 101K
L28	Coil	LS-282
L29	Coil	LAL03NA R22M
L30	Coil	LS-149A
L31	Coil	LS-150A
L32	Coil	LAL03NA 101K
L33	Coil	LAL03NA 102K
L34	Coil	LAL03NA 101K
L35	Coil	LAL03NA 561K
L36	Coil	LS-121A
L37	Coil	LW-15
L38	Coil	BT01RN1-A61

[MAIN UNIT]

REF. NO.	DESCRIPTION	PART NO.	
L39	Coil	BT01RN1-A61	
L40	Coil	LAL03NA 101K	
L41	Coil	LAL03NA 101K	
L42	Coil	LAL03NA 102K	
R1	Resistor	100kΩ	ELR20
R2	Resistor	100Ω	R20
R3	Resistor	4.7kΩ	ELR20
R4	Resistor	100kΩ	ELR20
R5	Resistor	100Ω	R20
R6	Resistor	47kΩ	ELR20
R7	Resistor	2.2kΩ	ELR20
R8	Resistor	5.6kΩ	ELR20
R9	Resistor	150Ω	R20
R10	Resistor	2.2kΩ	R25
R11	Resistor	470kΩ	ELR20
R12	Resistor	2.2kΩ	ELR20
R13	Resistor	33kΩ	R20
R14	Trimmer	22kΩ	RH0651CJ4J01A
R15	Resistor	22kΩ	ELR20
R16	Resistor	470kΩ	ELR20
R17	Resistor	10kΩ	R20
R18	Resistor	33kΩ	R20
R19	Resistor	22kΩ	ELR20
R20	Resistor	2.2MΩ	ELR20
R21	Resistor	10kΩ	ELR20
R22	Resistor	1.5MΩ	R20
R23	Resistor	470kΩ	R20
R24	Trimmer	10kΩ	RH0651C14J2WA
R25	Resistor	2.2MΩ	ELR20
R26	Resistor	10kΩ	R20
R27	Resistor	1kΩ	ELR20
R28	Resistor	22kΩ	ELR20
R29	Trimmer	10kΩ	RH0651C14J2WA
R30	Resistor	2.2kΩ	ELR20
R31	Trimmer	22kΩ	RH0651CJ4J01A
R32	Resistor	2.2kΩ	R20
R33	Resistor	2.2kΩ	R25
R34	Resistor	2.2kΩ	R20
R35	Resistor	2.2kΩ	R20
R36	Resistor	220Ω	ELR20
R37	Resistor	47Ω	R20
R38	Resistor	1kΩ	ELR20
R39	Resistor	470kΩ	ELR20
R40	Thermistor	23D29	
R41	Resistor	330Ω	ELR20
R42	Resistor	220Ω	R20
R43	Resistor	4.7kΩ	ELR20
R44	Resistor	4.7kΩ	ELR20
R45	Resistor	4.7kΩ	R25
R46	Resistor	1kΩ	R20
R47	Resistor	100Ω	R25
R48	Resistor	2.2kΩ	ELR20
R49	Resistor	1.5kΩ	R20
R50	Resistor	100Ω	R20
R51	Resistor	1kΩ	R20
R52	Resistor	100Ω	R25
R53	Resistor	2.2kΩ	ELR20
R54	Resistor	1.5kΩ	R20
R55	Resistor	10kΩ	R20
R56	Resistor	10kΩ	R20
R57	Resistor	10kΩ	R20
R58	Resistor	22kΩ	ELR20
R59	Resistor	1kΩ	ELR20
R60	Resistor	2.2kΩ	ELR20
R61	Resistor	6.8kΩ	ELR20
R62	Resistor	220Ω	ELR20
R63	Resistor	2.2kΩ	ELR20
R64	Resistor	5.6kΩ	ELR20
R65	Resistor	3.9kΩ	ELR20
R66	Resistor	470Ω	ELR20
R67	Resistor	3.9kΩ	ELR20
R68	Resistor	150Ω	ELR20
R69	Resistor	100Ω	R20

Downloaded from www.Manualslib.com manuals search engine

[MAIN UNIT]

REF. NO.	DESCRIPTION	PART NO.	
R70	Resistor	47kΩ	ELR20
R71	Thermistor	45D26	
R72	Trimmer	47kΩ	RH0651CS4J25A
R73	Resistor	10kΩ	ELR20
R74	Resistor	10kΩ	ELR20
R75	Resistor	100Ω	ELR20
R77	Resistor	3.3kΩ	ELR20
R78	Resistor	1.5kΩ	R20
R79	Resistor	15kΩ	ELR20
R80	Resistor	2.2kΩ	R20
R81	Resistor	2.2kΩ	ELR20
R82	Trimmer (IC-275A/E)	10kΩ	RH0651C14J2WA
R82	Trimmer (IC-275H)	2.2kΩ	RH0651CJ3J0CA
R83	Resistor	100Ω	R20
R84	Thermistor	23D29	
R85	Resistor	22Ω	ELR20
R86	Resistor	270Ω	ELR20
R87	Resistor	470kΩ	ELR20
R88	Resistor	470kΩ	ELR20
R89	Resistor	4.7kΩ	R20
R90	Resistor	220Ω	ELR20
R91	Resistor	4.7kΩ	R20
R92	Resistor	4.7kΩ	ELR20
R93	Resistor	1kΩ	ELR20
R94	Thermistor	23D29	
R95	Resistor	47kΩ	ELR20
R96	Resistor	33kΩ	ELR20
R97	Resistor	4.7kΩ	ELR20
R98	Resistor	470kΩ	ELR20
R99	Resistor	2.2kΩ	ELR20
R100	Resistor	22kΩ	ELR20
R101	Resistor	22kΩ	ELR20
R102	Resistor	27kΩ	ELR20
R103	Resistor	1kΩ	ELR20
R104	Resistor	470Ω	R20
R105	Trimmer	1kΩ	RH0651C13J1YA
R106	Resistor	100Ω	R20
R107	Resistor	1.5kΩ	R20
R108	Resistor	1.5kΩ	ELR20
R109	Resistor	47kΩ	ELR20
R110	Resistor	39kΩ	ELR20
R111	Thermistor	45D26	
R112	Resistor	68kΩ	ELR20
R113	Resistor	10kΩ	ELR20
R114	Resistor	56kΩ	ELR20
R115	Resistor	22kΩ	R25
R116	Resistor	1kΩ	ELR20
R117	Resistor	470kΩ	ELR20
R118	Resistor	470kΩ	ELR20
R119	Resistor	100kΩ	ELR20
R120	Trimmer	1MΩ	RH0651C16J0RA
R121	Trimmer	47kΩ	RH0651CS4J25A
R122	Resistor	10kΩ	R20
R123	Resistor	10kΩ	ELR20
R124	Resistor	10kΩ	ELR20
R125	Resistor	100kΩ	ELR20
R126	Resistor	100kΩ	ELR20
R127	Resistor	2.2MΩ	ELR20
R128	Resistor	2.2MΩ	ELR20
R129	Resistor	10kΩ	R20
R130	Resistor	4.7kΩ	ELR20
R131	Resistor	4.7kΩ	R20
R132	Resistor	220kΩ	ELR20
R133	Trimmer	10kΩ	RH0651C14J2WA
R134	Resistor	220kΩ	R20
R135	Trimmer	10kΩ	RH0651C14J2WA
R136	Resistor	2.2kΩ	ELR20
R137	Trimmer	10kΩ	RH0651C14J2WA
R138	Resistor	2.2kΩ	R20
R139	Resistor	100Ω	ELR20
R140	Resistor	100Ω	R25
R141	Resistor	1kΩ	R25
R142	Resistor	10kΩ	R20

[MAIN UNIT]

REF. NO.	DESCRIPTION	PART NO.	
R143	Resistor	4.7kΩ	R20
R144	Resistor	560Ω	R20
R145	Resistor	2.2kΩ	R20
R146	Resistor	22kΩ	R20
R147	Resistor	10kΩ	R20
R148	Resistor	100Ω	ELR20
R149	Resistor	10kΩ	ELR20
R150	Resistor	100kΩ	R20
R151	Trimmer	47kΩ	RH0651CS4J25A
R152	Trimmer	47kΩ	RH0651CS4J25A
R153	Resistor	150kΩ	ELR20
R154	Resistor	47kΩ	ELR20
R155	Resistor	47kΩ	ELR20
R156	Resistor	470kΩ	ELR20
R157	Resistor	47kΩ	ELR20
R158	Resistor	68kΩ	ELR20
R159	Resistor	2.2kΩ	ELR20
R160	Resistor	4.7kΩ	R20
R161	Resistor	2.2kΩ	R20
R162	Trimmer	4.7kΩ	RH0651CS3J2KA
R163	Resistor	68kΩ	ELR20
R164	Resistor	68kΩ	ELR20
R165	Resistor	100Ω	ELR20
R166	Resistor	10kΩ	ELR20
R167	Resistor	2.2kΩ	R20
R168	Resistor	470kΩ	ELR20
R169	Resistor	1kΩ	ELR20
R170	Resistor	910Ω	R20
R171	Resistor	1kΩ	R20
R172	Resistor	1.2kΩ	ELR20
R173	Trimmer	47kΩ	RH0651CS4J25A
R174	Resistor	100Ω	ELR20
R175	Resistor	2.2kΩ	R20
R176	Resistor	4.7kΩ	R20
R177	Resistor	4.7kΩ	ELR20
R178	Resistor	4.7kΩ	R20
R179	Resistor	22kΩ	R20
R180	Resistor	22kΩ	ELR20
R181	Resistor	10kΩ	ELR20
R182	Resistor	2.2kΩ	R20
R183	Resistor	100kΩ	ELR20
R184	Resistor	47kΩ	R25
R185	Resistor	100Ω	ELR20
R186	Resistor	2.2kΩ	R25
R187	Resistor	22kΩ	ELR20
R188	Resistor	22kΩ	R20
R191	Resistor	4.7kΩ	ELR20
R192	Resistor	150Ω	ELR20
R193	Resistor	2.2kΩ	ELR20
R194	Resistor	47Ω	ELR20
R195	Resistor	3.3kΩ	ELR20
R196	Resistor	33kΩ	ELR20
R197	Resistor	47Ω	R20
R198	Resistor	1kΩ	ELR20
R199	Resistor	4.7kΩ	ELR20
R200	Resistor	100kΩ	ELR20
R201	Resistor	1kΩ	ELR20
R202	Resistor	1kΩ	ELR20
R203	Resistor	47Ω	ELR20
R204	Resistor	22kΩ	ELR20
R205	Resistor	10kΩ	ELR20
R206	Resistor	1.5kΩ	ELR20
R207	Resistor	820Ω	ELR20
R208	Trimmer	330Ω	RH0652CN2J04A
R209	Resistor	10kΩ	ELR20
R210	Trimmer	10kΩ	RH0652C14J0FA
R211	Resistor	1kΩ	ELR20
R212	Resistor	10kΩ	ELR20
R213	Resistor	470Ω	ELR20
R214	Resistor	470Ω	ELR20
R215	Resistor	220kΩ	R20
R216	Resistor	1kΩ	R20
R217	Resistor	1kΩ	ELR20
R218	Resistor	1kΩ	ELR20
R219	Resistor	1kΩ	ELR20

Downloaded from www.Manualslib.com manuals search engine

[MAIN UNIT]

REF. NO.	DESCRIPTION	PART NO.	
R220	Resistor	100kΩ	ELR20
R221	Trimmer	1kΩ	RH0651C13J1YA
R222	Trimmer	47kΩ	RH0651CS4J25A
R223	Resistor	4.7kΩ	ELR20
R224	Resistor	4.7kΩ	ELR20
R225	Resistor	27kΩ	R20
R226	Resistor	5.6kΩ	ELR20
R227	Trimmer	1kΩ	RH0652C13J08A
R228	Resistor	330Ω	ELR20
R229	Resistor	220Ω	R20
R230	Resistor	18kΩ	ELR20
R232	Resistor	1kΩ	ELR20
R233	Resistor	1MΩ	ELR20
R235	Resistor	6.8kΩ	ELR20
R236	Resistor	12kΩ	ELR20
R237	Resistor	1MΩ	R20
R238	Resistor	1MΩ	ELR20
R239	Resistor	2.2MΩ	ELR20
R240	Trimmer	10kΩ	RH0651C14J2WA
R241	Resistor	47kΩ	ELR20
R242	Resistor	47kΩ	ELR20
R243	Resistor	33kΩ	ELR20
R244	Trimmer	10kΩ	RH0651C14J2WA
R245	Resistor	33kΩ	ELR20
R246	Resistor	1MΩ	ELR20
R248	Resistor (IC-275H only)	15kΩ	R20
R249	Resistor	22kΩ	ELR20
R250	Trimmer	4.7kΩ	RH0651CS3J2KA
R251	Resistor	470kΩ	R20
R252	Resistor	2.2MΩ	ELR20
R253	Resistor	150Ω	ELR20
R254	Resistor (IC-275A/E only)	22kΩ	ELR20
R255	Resistor	150kΩ	R20
R256	Trimmer	4.7kΩ	RH0651CS3J2KA
R257	Trimmer	1MΩ	RH0651C16J0RA
R259	Trimmer	100kΩ	RH0651C15J1UA
R260	Resistor	10kΩ	ELR20
R261	Resistor	10kΩ	R20
R262	Resistor	1MΩ	R20
R263	Resistor	1MΩ	R20
R264	Resistor	3.3MΩ	R25
R265	Trimmer	10kΩ	RH0651C14J2WA
R266	Resistor	2.2kΩ	ELR20
R267	Resistor	4.7kΩ	ELR20
R268	Resistor	1kΩ	R20
R269	Resistor	47kΩ	ELR20
R270	Resistor	47kΩ	R20
R271	Resistor	47kΩ	ELR20
R272	Resistor	1kΩ	R20
R273	Resistor	39kΩ	ELR20
R274	Resistor	15kΩ	ELR20
R275	Resistor	47kΩ	ELR20
R276	Resistor	1kΩ	ELR20
R277	Resistor	47kΩ	R20
R278	Resistor	100Ω	R20
R279	Resistor	470kΩ	ELR20
R280	Resistor	470kΩ	ELR20
R281	Resistor	10kΩ	ELR20
R282	Resistor	10kΩ	ELR20
R283	Resistor	4.7Ω	ELR25
R284	Resistor	1kΩ	ELR25
R285	Resistor	4.7Ω	ELR25
R286	Resistor	1kΩ	ELR25
R287	Resistor	470Ω	ELR25
R288	Resistor	4.7Ω	ELR25
R289	Resistor	2.2kΩ	R20
R290	Resistor	2.2kΩ	ELR20
R291	Resistor	10kΩ	R20
R292	Resistor	4.7Ω	R20
R293	Resistor	220Ω	ELR20
R294	Resistor	2.2kΩ	ELR20
R295	Resistor	2.2kΩ	ELR20
R296	Resistor	1kΩ	R20

[MAIN UNIT]

REF. NO.	DESCRIPTION	PART NO.		
R297	Resistor	470Ω	ELR20	
R298	Resistor	100kΩ	ELR20	
R299	Resistor	220kΩ	R20	
R300	Resistor	2.2kΩ	ELR20	
R301	Resistor	33Ω	ELR20	
R302	Resistor	100kΩ	ELR20	
R303	Resistor	22kΩ	ELR20	
R304	Resistor	2.2kΩ	R20	
R305	Resistor	100kΩ	ELR20	
R306	Resistor	47kΩ	R25	
R307	Resistor	47kΩ	ELR20	
R308	Resistor	47kΩ	R20	
R309	Resistor	10kΩ	ELR20	
R310	Trimmer	10kΩ	RH0651C14J2WA	
R311	Resistor	2.2kΩ	ELR20	
R312	Resistor	470kΩ	ELR20	
R313	Resistor	100Ω	R20	
R314	Resistor	10kΩ	ELR20	
R315	Resistor	2.2kΩ	ELR20	
R316	Resistor	470kΩ	ELR20	
R317	Resistor	10kΩ	R20	
R318	Resistor	10kΩ	R20	
R319	Resistor	10kΩ	ELR20	
R320	Resistor	470Ω	ELR20	
R321	Resistor	470Ω	R20	
R322	Resistor	2.2kΩ	R20	
R323	Trimmer	10kΩ	RH0651C14J2WA	
R324	Resistor	2.2kΩ	ELR20	
R326	Resistor	2.2kΩ	ELR20	
R327	Resistor	470Ω	ELR20	
R328	Resistor	47kΩ	ELR20	
R329	Resistor	10kΩ	R20	
R330	Resistor	2.2kΩ	R20	
R331	Resistor	10kΩ	ELR20	
R332	Resistor	220kΩ	ELR20	
R333	Resistor	470Ω	ELR20	
R334	Resistor	680kΩ	ELR20	
R336	Resistor	1MΩ	ELR20	
R337	Resistor	6.8kΩ	ELR20	
R338	Resistor	10kΩ	ELR20	
R339	Resistor	2.2kΩ	ELR20	
R340	Resistor	8.2kΩ	ELR20	
R341	Resistor	22kΩ	ELR20	
R342	Resistor	10kΩ	ELR20	
R344	Resistor	100kΩ	ELR20	
R345	Resistor	10kΩ	ELR20	
R347	Resistor	47kΩ	ELR20	
R348	Trimmer	47kΩ	RH0651CS4J25A	
R349	Resistor	12kΩ	R20	
R350	Resistor	2.2kΩ	ELR20	
R351	Resistor	10kΩ	R20	
R352	Resistor	1MΩ	ELR20	
R353	Resistor	4.7kΩ	ELR25	
R354	Resistor	22kΩ	R20	
C1	Ceramic	2pF	50V	
C2	Barrier Layer	0.0047μF	25V	
C3	Electrolytic	10μF	16V	MS7
C4	Ceramic	0.0047μF	50V	
C5	Barrier Layer	0.0047μF	25V	
C6	Barrier Layer	0.0047μF	25V	
C7	Ceramic	0.0047μF	50V	
C8	Ceramic	0.0047μF	50V	
C10	Ceramic	120pF	50V	
C11	Ceramic	22pF	50V	
C12	Electrolytic	10μF	16V	MS7
C13	Electrolytic	4.7μF	25V	MS7
C14	Ceramic	0.0047μF	50V	
C15	Ceramic	18pF	50V	
C16	Ceramic	0.0047μF	50V	
C17	Ceramic	0.0047μF	50V	
C18	Mylar	0.001μF	50V	F2Z
C19	Tantalum	1μF	35V	DN
C20	Electrolytic	10μF	16V	MS7

Downloaded from www.Manualslib.com manuals search engine

[MAIN UNIT]

REF. NO.	DESCRIPTION	PART NO.		
C21	Electrolytic	47µF	10V	
C22	Ceramic	150pF	50V	
C23	Ceramic	0.0047µF	50V	
C24	Ceramic	0.0047µF	50V	
C25	Ceramic	120pF	50V	
C26	Ceramic	4pF	50V	
C27	Ceramic	120pF	50V	
C28	Ceramic	3pF	50V	
C29	Ceramic	0.0047µF	50V	
C30	Barrier Layer	0.1µF	16V	
C31	Barrier Layer	0.0047µF	25V	
C32	Barrier Layer	0.1µF	16V	
C33	Ceramic	0.0047µF	50V	
C34	Ceramic	0.0047µF	50V	
C35	Ceramic	0.0047µF	50V	
C36	Ceramic	0.0047µF	50V	
C37	Ceramic	22pF	50V	
C38	Ceramic	22pF	50V	
C39	Ceramic	0.0047µF	50V	
C40	Ceramic	0.0047µF	50V	
C41	Ceramic	0.0047µF	50V	
C42	Ceramic	0.0047µF	50V	
C43	Ceramic	0.0047µF	50V	
C44	Ceramic	0.0047µF	50V	
C45	Ceramic	0.0047µF	50V	
C46	Ceramic	0.0047µF	50V	
C47	Ceramic	0.0047µF	50V	
C48	Ceramic	0.001µF	50V	
C49	Ceramic	5pF	50V	
C50	Ceramic	0.0047µF	50V	
C51	Ceramic	120pF	50V	
C52	Barrier Layer	0.047µF	25V	
C53	Barrier Layer	0.047µF	25V	
C54	Barrier Layer	560pF	50V	
C55	Mylar	0.0047µF	50V	F2Z
C56	Ceramic	0.0047µF	50V	
C57	Barrier Layer	0.0047µF	25V	
C58	Barrier Layer	0.0047µF	25V	
C59	Ceramic	0.0047µF	50V	
C60	Ceramic	0.0047µF	50V	
C62	Barrier Layer	0.047µF	25V	
C63	Ceramic	0.0047µF	50V	
C64	Ceramic	0.0047µF	50V	
C65	Ceramic	0.0047µF	50V	
C66	Mylar	0.01µF	50V	F2Z
C67	Ceramic	0.0047µF	50V	
C68	Ceramic	0.0047µF	50V	
C69	Ceramic	0.0047µF	50V	
C70	Ceramic	0.0047µF	50V	
C71	Ceramic	9pF	50V	
C72	Ceramic	100pF	50V	CH
C73	Ceramic	200pF	50V	
C74	Barrier Layer	0.1µF	16V	
C75	Ceramic	0.0047µF	50V	
C76	Ceramic	100pF	50V	
C77	Ceramic	0.0047µF	50V	
C78	Barrier Layer	0.1µF	16V	
C79	Barrier Layer	0.1µF	16V	
C80	Ceramic	10pF	50V	
C81	Ceramic	120pF	50V	SH
C82	Ceramic	22pF	50V	
C83	Barrier Layer	0.1µF	16V	
C84	Electrolytic	10µF	16V	MS7
C85	Ceramic	120pF	50V	
C86	Barrier Layer	0.01µF	25V	
C87	Ceramic	470pF	50V	
C88	Ceramic	0.001µF	50V	
C89	Ceramic	33pF	50V	
C90	Barrier Layer	0.01µF	25V	
C91	Tantalum	2.2µF	16V	DN
C92	Barrier Layer	0.1µF	16V	
C93	Mylar	0.033µF	50V	F2Z
C94	Mylar	0.033µF	50V	F2Z
C95	Barrier Layer	0.0015µF	25V	
C96	Barrier Layer	0.0015µF	25V	

[MAIN UNIT]

REF. NO.	DESCRIPTION	PART NO.		
C97	Barrier Layer	0.0015µF	25V	
C98	Electrolytic	10µF	16V	MS7
C99	Electrolytic	0.1µF	50V	MS7
C100	Ceramic	0.001µF	50V	
C101	Barrier Layer	0.1µF	16V	
C102	Ceramic	27pF	50V	
C103	Ceramic	0.0047µF	50V	
C104	Ceramic	0.0047µF	50V	
C105	Ceramic	0.0047µF	50V	
C106	Ceramic	47pF	50V	
C107	Ceramic	0.0047µF	50V	
C108	Ceramic	4pF	50V	
C109	Ceramic	150pF	50V	CH
C110	Ceramic	150pF	50V	CH
C112	Ceramic	0.0047µF	50V	
C113	Ceramic	0.0047µF	50V	
C114	Ceramic	0.0047µF	50V	
C115	Ceramic	0.0047µF	50V	
C116	Ceramic	0.0047µF	50V	
C117	Ceramic	33pF	50V	CH
C118	Ceramic	0.0047µF	50V	
C119	Trimmer	30pF	CV05E3001	
C120	Ceramic	0.0047µF	50V	
C121	Ceramic	150pF	50V	CH
C122	Ceramic	150pF	50V	CH
C123	Tantalum	0.47µF	35V	DN
C124	Ceramic	47pF	50V	
C125	Ceramic	0.0047µF	50V	
C126	Ceramic	150pF	50V	
C127	Barrier Layer	0.047µF	25V	
C128	Barrier Layer	0.01µF	25V	
C129	Barrier Layer	0.1µF	16V	
C130	Ceramic	0.0047µF	50V	
C131	Cylinder	22pF	UP050SL220J-NA	
C132	Ceramic	150pF	50V	
C133	Tantalum	0.1µF	35V	DN
C134	Mylar	0.001µF	50V	F2Z
C135	Tantalum	1µF	35V	DN
C136	Electrolytic	47µF	10V	MS9
C137	Electrolytic	10µF	16V	MS7
C138	Ceramic	10µF	16V	MS7
C139	Ceramic	2.2µF	16V	DN
C140	Electrolytic	10µF	16V	MS7
C141	Electrolytic	10µF	16V	MS7
C142	Electrolytic	10µF	16V	MS7
C143	Electrolytic	10µF	16V	MS7
C144	Electrolytic	0.1µF	50V	MS7
C145	Electrolytic	0.22µF	50V	MS7
C146	Electrolytic	10µF	16V	MS7
C147	Ceramic	120pF	50V	
C148	Mylar	0.0022µF	50V	F2Z
C149	Ceramic	0.001µF	50V	
C150	Electrolytic	10µF	16V	MS7
C151	Electrolytic (IC-275A/E)	10µF	16V	MS7
C151	Electrolytic (IC-275H)	47µF	10V	
C152	Electrolytic	0.47µF	50V	MS7
C153	Mylar	0.0022µF	50V	F2Z
C154	Electrolytic (IC-275A/E)	10µF	16V	MS7
C154	Electrolytic (IC-275H)	47µF	10V	
C155	Electrolytic	1µF	50V	MS7
C156	Barrier Layer	0.0047µF	25V	
C157	Electrolytic	0.47µF	50V	BP
C158	Electrolytic	47µF	10V	
C159	Barrier Layer	0.047µF	25V	
C160	Electrolytic	47µF	10V	
C161	Electrolytic	4.7µF	25V	MS7
C162	Electrolytic	4.7µF	25V	MS7
C163	Electrolytic	4.7µF	25V	MS7
C164	Barrier Layer	0.1µF	16V	
C165	Electrolytic	100µF	10V	
C166	Electrolytic	4.7µF	25V	MS7

Downloaded from www.Manualslib.com manuals search engine

[MAIN UNIT]

REF. NO.	DESCRIPTION	PART NO.		
C167	Electrolytic	10μF	16V	MS7
C168	Ceramic	0.0047μF	50V	
C169	Ceramic	0.0047μF	50V	
C171	Electrolytic	10μF	16V	MS7
C172	Electrolytic	10μF	16V	MS7
C173	Barrier Layer	0.047μF	25V	
C174	Barrier Layer	0.047μF	25V	
C175	Barrier Layer	0.047μF	25V	
C176	Barrier Layer	0.047μF	25V	
C178	Barrier Layer	0.001μF	25V	
C179	Electrolytic	4.7μF	25V	MS7
C180	Electrolytic	47μF	10V	
C181	Mylar	0.022μF	50V	F2Z
C182	Mylar	0.022μF	50V	F2Z
C183	Mylar	0.022μF	50V	F2Z
C184	Barrier Layer	0.1μF	16V	
C185	Tantalum	10μF	16V	DN
C186	Electrolytic	1μF	50V	MS7
C187	Barrier Layer	0.0047μF	25V	
C188	Tantalum	1μF	35V	DN
C189	Ceramic	470pF	50V	
C190	Electrolytic	4.7μF	25V	MS7
C191	Ceramic	100pF	50V	
C192	Ceramic	0.0047μF	50V	
C193	Ceramic	0.0047μF	50V	
C194	Ceramic	470pF	50V	
C195	Barrier Layer	0.1μF	16V	
C196	Tantalum	0.47μF	35V	DN
C197	Ceramic	0.001μF	50V	
C198	Ceramic	470pF	50V	
C199	Barrier Layer	0.0033μF	25V	
C200	Mylar	0.01μF	50V	F2Z
C201	Mylar	0.033μF	50V	F2Z
C202	Mylar	0.0022μF	50V	F2Z
C203	Electrolytic	0.47μF	50V	MS7
C204	Electrolytic	0.47μF	50V	MS7
C205	Electrolytic	10μF	16V	MS7
C206	Barrier Layer	0.047μF	25V	
C207	Electrolytic	100μF	10V	
C208	Electrolytic	100μF	10V	
C209	Electrolytic	470μF	16V	
C210	Electrolytic	470μF	16V	
C211	Mylar	0.022μF	50V	
C212	Electrolytic	0.22μF	50V	MS7
C213	Barrier Layer	0.0047μF	25V	
C214	Barrier Layer	0.1μF	16V	
C215	Electrolytic	1μF	50V	MS7
C216	Electrolytic	10μF	16V	MS7
C217	Electrolytic	4.7μF	25V	MS7
C218	Barrier Layer	0.1μF	16V	
C219	Electrolytic	10μF	16V	MS7
C220	Electrolytic	3.3μF	50V	MS7
C221	Electrolytic	0.22μF	50V	MS7
C222	Barrier Layer	0.0047μF	25V	
C223	Electrolytic	10μF	16V	MS7
C224	Tantalum	1μF	35V	DN
C225	Barrier Layer	0.1μF	16V	
C226	Electrolytic	0.1μF	50V	MS7
C228	Electrolytic	10μF	16V	BP
C229	Electrolytic	4.7μF	25V	MS7
C230	Electrolytic	3.3μF	50V	MS7
C231	Ceramic	0.0047μF	50V	
C232	Barrier Layer	0.0047μF	25V	
C233	Ceramic	0.0047μF	50V	
C234	Tantalum	1.5μF	25V	DN
C235	Barrier Layer	0.1μF	16V	
C236	Electrolytic	3.3μF	50V	MS7
C237	Ceramic	0.0047μF	50V	
C238	Ceramic	0.0047μF	50V	
C239	Barrier Layer	0.0047μF	25V	
C240	Barrier Layer	0.0047μF	25V	
C242	Electrolytic	3.3μF	25V	MS7
C243	Electrolytic	10μF	16V	MS7
C244	Ceramic	0.0047μF	50V	
C245	Tantalum	1.0μF	35V	DN

[MAIN UNIT]

REF. NO.	DESCRIPTION	PART NO.	
C246	Barrier Layer	0.047μF	25V
C247	Electrolytic	47μF	10V
C248	Barrier Layer	0.1μF	16V
C249	Barrier Layer	0.0047μF	25V
C250	Ceramic	47pF	50V
C251	Ceramic	47pF	50V
C252	Ceramic	47pF	50V
C253	Ceramic	47pF	50V
C254	Ceramic	47pF	50V
C255	Ceramic	47pF	50V
C256	Ceramic	0.0047μF	50V
C257	Ceramic	47pF	50V
C258	Ceramic	47pF	50V
C259	Ceramic (IC-275H only)	0.001μF	50V
J1	Connector	B12B-EH-S	
J2	Connector	B06B-EH-S	
J3	Connector	B05B-EH-S	
J4	Connector	B07B-EH-S	
J5	Connector	B04B-EH-S	
J6	Connector	B05B-EH-S	
J7	Connector	B04B-EH-S	
J8	Connector	B03B-EH-S	
J9	Connector	B13B-EH-S	
J10	Connector	B07B-EH-S	
J11	Connector	B09B-EH-S	
J12	Connector	B12B-EH-S	
J13	Connector	B09B-EH-S	
J14	Connector	B03B-EH-S	
J15	Connector	TMP-J01X-A2	
J16	Connector	HSJ0807-01-010	
J17	Connector	HSJ0807-01-010	
S1	Switch	SSSS31124A	
S2	Switch	SSSS31124A	
S3	Switch	SSSY12	
S4	Switch	SSSY12	
S5	Switch (IC-275H only)	SSSS31124A	
EP1	P.C. Board	B-1184E	
W50	Jumper	JPW-02A	
W51	Jumper	JPW-02A	

[SQL UNIT]

REF. NO.	DESCRIPTION	PART NO.	
IC1	IC	NJM4558M	
Q1	Transistor	2SC2712 Y	
Q2	Transistor	2SC3395	
D1	Diode	HSM88AS	
R1	Chip	2.2kΩ	MCR10
R2	Chip	470kΩ	MCR10
R3	Chip	4.7kΩ	MCR10
R4	Chip	10kΩ	MCR10
R5	Chip	10kΩ	MCR10

Downloaded from www.Manualslib.com manuals search engine

[SQL UNIT]

REF. NO.	DESCRIPTION	PART NO.	
R6	Chip	470kΩ	MCR10
R7	Chip	470kΩ	MCR10
R8	Chip	1kΩ	MCR10
R9	Chip	6.8kΩ	MCR10
R10	Chip	47kΩ	MCR10
R11	Chip	100kΩ	MCR10
C1	Monolithic	330pF	GRM40
C2	Monolithic	150pF	GRM40
C3	Monolithic	470pF	GRM40
C4	Monolithic	0.1μF	GRM40 F
C5	Monolithic	56pF	GRM40
C6	Monolithic	0.1μF	GRM40 F
EP1	P.C. Board	B-1255A	

[RF YGR UNIT]

REF. NO.	DESCRIPTION	PART NO.
Q1	FET	2SK241 Y
Q2	FET	2SK241 Y
Q3	Transistor	2SC3355
Q4	Transistor	2SC2053
Q5	FET	2SK125
Q6	FET	2SK125
Q7	FET	3SK121 Y
Q8	Transistor	2SC2053
Q9	Transistor	RN1204
Q10	Transistor	RN2202
Q11	Transistor	RN1204
Q12	Transistor	RN2202
Q13	Transistor	2SC3355
Q14	Transistor	RN2202
D1	Diode	1SS53
D2	Diode	1SS53
D3	Diode	1SS216
D4	Diode	1SS216
D5	Diode (IC-275A/E only)	MI301
D6	Diode	1SS216
D7	Varicap	1SV50E (1)
D8	Varicap	1SV50E (1)
D9	Varicap	1SV50E (1)
D10	Diode	1SS216
D11	Diode	1S953
L1	Coil	LS-164
L2	Coil	LS-64
L3	Coil	LB-50A
L4	Coil	LB-1-1A
L5	Coil	LB-83
L6	Coil	LB-83
L7	Coil	LB-83
L8	Coil	LA-264
L9	Coil	LW-25
L10	Coil	LA-233
L11	Coil	LS-228
L12	Coil	LR-145
L13	Coil	LA-235
L14	Coil	LB-50A
L15	Coil	LB-1-1A
L16	Coil	LB-34A
L17	Coil	LB-34A

[RF YGR UNIT]

REF. NO.	DESCRIPTION	PART NO.	
L18	Coil	LB-50A	
L19	Coil	LA-235	
L20	Coil	LR-116	
L21	Coil	LA-234	
L22	Coil	LA-235	
L23	Coil	LS-302	
L24	Coil	LS-302	
L25	Coil	LS-302	
L26	Coil	LA-245	
L27	Coil	LA-244	
L28	Coil	LA-245	
L29	Coil	LA-252	
L30	Coil	LA-253	
R1	Resistor	2.2kΩ	ELR20
R2	Resistor	100Ω	ELR20
R3	Trimmer	1kΩ	RH0651C13J1YA
R4	Resistor	100Ω	R20
R5	Resistor	47Ω	R20
R6	Resistor	10kΩ	R20
R7	Resistor	1kΩ	R20
R8	Resistor	3.9kΩ	ELR20
R9	Resistor	3.3kΩ	R20
R10	Resistor	22kΩ	ELR20
R11	Resistor	68Ω	R20
R12	Resistor	3.9kΩ	ELR20
R13	Resistor	470Ω	R20
R14	Resistor	2.2kΩ	R20
R15	Resistor	2.2kΩ	R20
R16	Resistor	47Ω	R20
R17	Resistor	470Ω	ELR20
R18	Resistor	47Ω	ELR20
R19	Resistor	470Ω	ELR20
R20	Resistor	150Ω	R20
R21	Resistor	3.9kΩ	ELR20
R22	Resistor	12kΩ	ELR20
R23	Resistor	47Ω	ELR20
R24	Resistor	47Ω	R20
R25	Resistor	100kΩ	ELR20
R26	Resistor	22kΩ	ELR20
R27	Resistor	12kΩ	ELR20
R28	Resistor	3.9kΩ	ELR20
R29	Resistor	4.7kΩ	ELR20
R30	Resistor	10kΩ	ELR20
R31	Resistor	1kΩ	ELR20
R32	Resistor	100Ω	ELR20
R33	Resistor	47Ω	R10
R34	Resistor	680Ω	R20
R35	Resistor	1.2kΩ	ELR20
R36	Resistor	47kΩ	ELR20
R37	Resistor	47Ω	R20
R38	Resistor	100kΩ	R20
R39	Resistor	100kΩ	R20
R40	Resistor	100kΩ	R20
R41	Resistor	68Ω	R20
R42	Resistor	680Ω	R20
R43	Resistor	120Ω	ELR20
R44	Resistor	47Ω	R20
R46	Resistor	1Ω	ELR20
R47	Resistor	1Ω	ELR20
R48	Resistor	10kΩ	ELR20
R49	Resistor	10kΩ	ELR20
R50	Resistor	2.2kΩ	R20
C1	Ceramic	0.001μF	50V
C2	Ceramic	0.0047μF	50V
C3	Ceramic	100pF	50V
C4	Ceramic	33pF	50V
C5	Ceramic	33pF	50V
C6	Ceramic	0.001μF	50V
C7	Ceramic	0.001μF	50V
C8	Ceramic	7pF	50V CH
C9	Ceramic	0.0047μF	50V

Downloaded from www.Manualslib.com manuals search engine

[RF YGR UNIT]

REF. NO.	DESCRIPTION	PART NO.	
C10	Ceramic	22pF	50V
C11	Ceramic	0.001μF	50V
C12	Ceramic	18pF	50V
C13	Ceramic	6pF	50V
C14	Ceramic	220pF	50V
C15	Ceramic	0.001μF	50V
C16	Ceramic	20pF	50V
C17	Ceramic	0.001μF	50V
C18	Ceramic	100pF	50V
C19	Ceramic	0.0047μF	50V
C20	Ceramic	220pF	50V
C21	Ceramic	0.0047μF	50V
C22	Ceramic	22pF	50V
C23	Ceramic	24pF	50V
C24	Trimmer	20pF	CV38D2001
C25	Ceramic	0.0047μF	50V
C26	Barrier Layer	0.0047μF	25V
C27	Ceramic	120pF	50V
C28	Ceramic	0.001μF	50V
C29	Ceramic	0.001μF	50V
C30	Ceramic	120pF	50V
C31	Ceramic	22pF	50V
C32	Ceramic	0.001μF	50V
C33	Ceramic	0.001μF	50V
C34	Ceramic	33pF	50V
C35	Ceramic	0.001μF	50V
C36	Ceramic	0.001μF	50V
C37	Ceramic	0.0047μF	50V
C38	Ceramic	0.001μF	50V
C39	Ceramic	2pF	50V
C40	Ceramic	18pF	50V
C41	Ceramic	0.001μF	50V
C42	Ceramic	22pF	50V
C43	Ceramic	120pF	50V
C44	Ceramic	0.0047μF	50V
C45	Ceramic	0.0047μF	50V
C46	Ceramic	15pF	50V
C47	Ceramic	0.001μF	50V
C48	Ceramic	18pF	50V
C49	Ceramic	27pF	50V
C50	Ceramic	10pF	50V
C51	Ceramic	15pF	50V
C52	Ceramic	0.001μF	50V
C53	Ceramic	0.001μF	50V
C54	Ceramic	22pF	50V
C55	Ceramic	0.0047μF	50V
C56	Ceramic	18pF	50V
C57	Ceramic	1pF	50V
C58	Ceramic	0.5pF	50V
C59	Ceramic	15pF	50V
C60	Ceramic	1pF	50V
C61	Ceramic	0.5pF	50V
C62	Ceramic	15pF	50V
C63	Ceramic	1pF	50V
C64	Ceramic	0.001μF	50V
C65	Ceramic	0.001μF	50V
C66	Ceramic	0.001μF	50V
C67	Ceramic	0.0047μF	50V
C68	Ceramic	0.001μF	50V
C69	Ceramic	0.001μF	50V
C70	Ceramic	0.001μF	50V
C71	Ceramic	0.001μF	50V
C72	Barrier Layer	0.0047μF	25V
C73	Ceramic	0.001μF	50V
C74	Ceramic	0.001μF	50V
C75	Ceramic	0.0047μF	50V
C76	Ceramic	0.001μF	50V
C77	Ceramic	0.001μF	50V
C78	Ceramic	0.001μF	50V
C79	Ceramic	0.001μF	50V
C80	Ceramic	0.0047μF	50V
C81	Ceramic	27pF	50V
C82	Ceramic (IC-275A/E only)	0.001μF	50V
C83	Ceramic	0.0047μF	50V

[RF YGR UNIT]

REF. NO.	DESCRIPTION	PART NO.	
C84	Ceramic	15pF	50V
C85	Trimmer	10pF	CV38D1001
C86	Ceramic (IC-275A/E only)	180pF	50V
C87	Ceramic	220pF	50V
C88	Barrier Layer	0.0047μF	25V
C90	Ceramic	0.001μF	50V
C91	Ceramic	220pF	50V
C92	Ceramic	15pF	50V
C93	Ceramic	220pF	50V
C94	Ceramic	0.001μF	50V
C95	Ceramic	220pF	50V
C96	Ceramic	0.0047μF	50V
C97	Ceramic	43pF	50V
J1	Connector	B04B-EH-S	
J2	Connector	TMP-J01X-A2	
J3	Connector	TMP-J01X-A2	
J4	Connector	TMP-J01X-A2	
P1	Connector	TMP-P01X-A1	
P2	Connector	EHR-07	
EP1	P.C. Board	B-1185B	

[REG UNIT] (IC-275A/E ONLY)

REF. NO.	DESCRIPTION	PART NO.	
IC1	IC	SG3524N	
Q1	Transistor	2SC2501	
Q2	Transistor	2SC2501	
D1	Diode	SB1680 (ESAC85-009)	
D2	Diode	V19B	
D3	Diode	V19B	
D4	Diode	1N4002	
D5	Diode	KBL06	
D6	Diode	1N4002	
L1	Coil	LR-59A	
L2	Coil	TO-12	
L3	Coil	TC-4	
L4	Coil	FL7H 102J 1000μ	
L5	Coil	TI-5	
L6	Coil	LR-92	
R1	Resistor	120kΩ	R20
R2	Resistor	120kΩ	R20
R3	Resistor	4.7Ω	R20
R4	Resistor	4.7Ω	R20
R5	Resistor	22Ω	R20
R6	Resistor	22Ω	R20
R7	Resistor	390Ω	R25
R8	Resistor	33Ω	R25
R9	Resistor	0.002Ω	RA-1
R10	Resistor	2.2kΩ	R20
R11	Resistor	33kΩ	R20
R12	Resistor	4.7kΩ	ELR20
R13	Resistor	4.7kΩ	R25
R14	Resistor	4.7kΩ	ELR20

Downloaded from www.Manualslib.com manuals search engine

[REG UNIT] (IC-275A/E ONLY)

REF. NO.	DESCRIPTION	PART NO.
R15	Trimmer	10kΩ RH0651C14J2WA
R16	Resistor	15kΩ R20
R17	Absorber	ERZ-C07DK431
R18	Resistor	SRW2P0.5
R19	Resistor	SRW2P0.5
R20	Resistor	120kΩ R20
R21	Resistor	120kΩ R20
R22	Resistor	10kΩ R20
C1	Ceramic	0.0022μF DE7100F222MAC400
C2	Ceramic	0.0022μF DE7100F222MAC400
C3	Ceramic	0.02μF 500V
C4	Electrolytic	3.3μF 200V 200UPA3R3VA-M
C5	Electrolytic	3.3μF 200V 200UPA3R3VA-M
C6	Ceramic	0.0022μF DE7100F222MAC400
C7	Ceramic	470pF 500V
C8	Metallized	0.47μF 400V 400MMW474K
C9	Ceramic	0.0047μF 50V
C10	Ceramic	0.0047μF 50V
C11	Electrolytic	1000μF 16V ECEA1CG102S
C12	Electrolytic	1000μF 16V ECEA1CG102S
C13	Electrolytic	47μF 16V
C14	Mylar	0.01μF 50V F2Z
C15	Mylar	0.01μF 50V F2Z
C16	Electrolytic	0.47μF 50V
C17	Electrolytic	10μF 16V
C18	Mylar	0.001μF 50V F2Z
C19	Ceramic	0.001μF 50V
C20	Electrolytic	10μF 16V
C21	Monolithic	0.68μF 50V C76AF1H684Z
C22	Ceramic	0.0022μF 50V
C23	Ceramic	0.0022μF 500V
C24	Ceramic	0.0022μF 500V
C25	Ceramic	0.0022μF 500V
C26	Ceramic	0.0022μF 500V
C27	Electrolytic	330μF 200V 200 SXP 330
C28	Electrolytic	330μF 200V 200 SXP 330
C29	Electrolytic	330μF 200V 200 SXP 330
C30	Electrolytic	330μF 200V 200 SXP 330
C31	Electrolytic	470μF 25V
C32	Electrolytic	100μF 25V
C33	Monolithic	0.68μF 50V C76AF1H684Z
C34	Metallized	0.082μF 250VAC ECQ-U2A823MW
C35	Ceramic	0.001μF DE7090B102KAC400
C36	Ceramic	0.001μF DE7090B102KAC400
J1	Connector	AP-300-X-A-1-NI-BLACK
P1	Connector	1625-03P1
P2	DC Cord	OPC-154
P3	Connector	1625-03R1
F1	Fuse (#08A only)	F.G.M.B. 125V 5A
F1	Fuse (#06E, #10A, #12E only)	F.G.M.B. 250V 3A
F2	Holder	FH-033
T1	Transformer	TP-32
EP1	P.C. Board	B-1174B
EP2	Ferrite Bead	FSQH070RN
W9	Jumper	JPW-02A

[PA UNIT] (IC-275A/E)

REF. NO.	DESCRIPTION	PART NO.
IC1	IC	SC-1020
IC2	IC	NJM7809A
Q1	Transistor	2SC2785 FF/EF/KF
Q2	Transistor	2SD359
Q3	Transistor	2SC2120 Y
D1	Diode	15CD11
D2	Diode	1SS237
D3	Diode	1SS237
D4	Diode	MI308
D5	Diode	MI308
L1	Coil	LW-9
L2	Coil	LW-19
L3	Coil	LA-235
L4	Coil	LA-263
L5	Coil	LA-263
L6	Coil	LA-253
L7	Coil	LW-19
L8	Coil	LA-238
R1	Resistor	3.3kΩ R20
R2	Resistor	470Ω R20
R3	Resistor	330Ω R50X
R4	Resistor	3.3Ω R50X
R5	Resistor	82Ω ELR20
R6	Resistor	220Ω R25
R7	Resistor	220Ω R25
R8	Resistor	0.15Ω RGB3
R9	Resistor	100Ω R50X
R10	Resistor	2.2kΩ R25
R11	Resistor	56Ω ELR25
R12	Resistor	680Ω ELR25
R13	Resistor	1kΩ R20
R14	Resistor	1kΩ R20
R15	Resistor	82Ω ELR20
C1	Ceramic	220pF 50V
C2	Ceramic	0.0047μF 50V
C3	Ceramic	220pF 50V
C4	Electrolytic	1μF 50V
C5	Ceramic	220pF 50V
C6	Barrier Layer	0.047μF 25V
C7	Ceramic	0.0047μF 50V
C8	Ceramic	220pF 50V
C12	Ceramic	220pF 50V
C13	Ceramic	220pF 50V
C14	Ceramic	0.001μF 500V
C15	Ceramic	22pF 500V
C16	Ceramic	0.001μF 500V
C17	Ceramic	15pF 500V
C19	Ceramic	33pF 500V
C20	Ceramic	33pF 500V
C21	Ceramic	15pF 500V
C22	Ceramic	220pF 50V
C23	Ceramic	220pF 50V
C24	Ceramic	0.0047μF 50V
C25	Electrolytic	470μF 16V MS16
C26	Ceramic	0.0047μF 50V
C27	Barrier Layer	0.1μF 16V
C28	Ceramic	0.0047μF 50V
C29	Ceramic	0.0047μF 50V
C30	Barrier Layer	0.1μF 16V
C31	Ceramic	0.0047μF 50V
C32	Ceramic	220pF 50V
C33	Electrolytic	0.47μF 50V
C34	Ceramic	0.0047μF 50V
C35	Ceramic	0.0047μF 50V
C36	Electrolytic	10μF 16V

Downloaded from www.Manualslib.com manuals search engine

[PA UNIT] (IC-275A/E)

REF. NO.	DESCRIPTION	PART NO.
C37	Ceramic	0.0047µF 50V
C38	Ceramic	220pF 50V
C39	Ceramic	15pF 500V
C40	Ceramic	100pF 500V
C41	Ceramic	120pF 50V
C42	Ceramic	0.0047µF 50V
C43	Ceramic	0.0047µF 50V
C44	Electrolytic	2.2µF 50V
C45	Ceramic	0.0047µF 50V
C46	Ceramic	0.0047µF 50V
C47	Ceramic	0.001µF 50V
C48	Electrolytic	100µF 16V
C49	Ceramic	0.0047µF 50V
C50	Electrolytic	10µF 16V MS7
C51	Ceramic	0.0047µF 50V
C52	Feed Through	TF318-450 E 102 GMV 50V
C53	Feed Through	TF318-450 E 102 GMV 50V
C54	Feed Through	TF318-450 E 102 GMV 50V
C55	Feed Through	TF318-450 E 102 GMV 50V
C56	Ceramic	0.0047µF 50V
C57	Ceramic	0.0047µF 50V
C58	Ceramic	0.0047µF 50V
C59	Ceramic	0.0047µF 50V
C60	Ceramic	0.0047µF 50V
C61	Ceramic	0.0047µF 50V
C62	Feed Through	TF240-602SS332Z 50V
C63	Feed Through	TF240-602SS332Z 50V
C64	Feed Through	TF240-602SS332Z 50V
C65	Feed Through	TF240-602SS332Z 50V
C66	Feed Through	TF240-602SS332Z 50V
C67	Feed Through	TF240-602SS332Z 50V
C68	Feed Through	TF240-620SS332Z 50V
C69	Feed Through	TF240-602SS332Z 50V
C70	Electrolytic	470µF 16V MS16
J1	Connector	LLR-6
J2	Connector	RT-01T-1.3B
J3	Connector	RT-01T-1.3B
J4	Connector	RT-01T-1.3B
J5	Connector	RT-01T-1.3B
J6	Connector	RT-01T-1.3B
J7	Connector	RT-01T-1.3B
J8	Connector	RT-01T-1.3B
J9	Connector	RT-01T-1.3B
J10	Connector	RT-01T-1.3B
J11	Connector	MR-DSE-01
J12	Connector	RT-01T-1.3B
J13	Connector	RT-01T-1.3B
J14	Connector	RT-01T-1.3B
J15	Connector	RT-01T-1.3B
J16	Connector	RT-01T-1.3B
J17	Connector	TLB-P07H-B1
J18	Connector	TLB-P04H-B1
J19	Connector	B03B-EH-S
J20	Connector	RT-01T-1.3B
J21	Connector	B04B-EH-S
P1	Connector	1490R-1
P2	Connector	TMP-P01X-A1
P3	Connector	TMP-P01X-A1
P4	Connector	EHR-03
P5	Connector	SMR-10V-B
P6	Connector	EHR-03
S1	Thermal	OHD3-50M
SP1	Speaker	065K12I0810
MF1	Motor	HMK2609-01-090

[PA UNIT] (IC-275A/E)

REF. NO.	DESCRIPTION	PART NO.
EP1	P.C. Board	B-1191B
EP2	P.C. Board	B-1192B

[CTRL UNIT] (IC-275H ONLY)

REF. NO.	DESCRIPTION	PART NO.
IC1	IC	NJM7809A
Q1	Transistor	2SD468
Q2	Transistor	2SC2785 FF/EF/KF
Q3	Transistor	RN1204
Q4	Transistor	2SB562
Q5	Transistor	RN1204
Q6	Transistor	2SC2785 FF/EF/KF
Q7	Transistor	2SD359
D1	Diode	RD10.0E B2
D2	Diode	1SS53
D3	Diode	1SS53
D4	Diode	15CD11
R1	Resistor	SQ5L0.012-J
R2	Resistor	1kΩ ELR20
R3	Resistor	1kΩ R20
R4	Resistor	1kΩ R20
R5	Resistor	1kΩ ELR20
R7	Resistor	3.3Ω R25
R8	Resistor	470Ω ELR20
R9	Resistor	3.3kΩ R20
R10	Trimmer	100kΩ RH0651C15J1UA
R11	Resistor	4.7kΩ R20
R12	Resistor	330Ω R50X
R13	Resistor	100kΩ R20
R14	Resistor	680Ω R20
C1	Electrolytic	1000µF 16V MS16
C2	Ceramic	0.0047µF 50V
C3	Ceramic	220pF 50V
C4	Ceramic	220pF 50V
C5	Ceramic	220pF 50V
C6	Ceramic	220pF 50V
C7	Ceramic	220pF 50V
C8	Ceramic	220pF 50V
C9	Ceramic	220pF 50V
C10	Electrolytic	1000µF 16V MS16
C11	Ceramic	0.0047µF 50V
C12	Ceramic	220pF 50V
C13	Ceramic	220pF 50V
C14	Ceramic	220pF 50V
C15	Ceramic	220pF 50V
C17	Electrolytic	1µF 50V
C18	Ceramic	220pF 50V
C19	Ceramic	220pF 50V
C20	Ceramic	220pF 50V
C21	Ceramic	220pF 50V
C22	Ceramic	220pF 50V
C23	Ceramic	220pF 50V
C24	Ceramic	220pF 50V
C25	Electrolytic	22µF 25V
C26	Electrolytic	47µF 10V
C27	Electrolytic	47µF 25V
C28	Ceramic	220pF 50V
C29	Ceramic	220pF 50V
C30	Ceramic	0.0047µF 50V
C31	Electrolytic	0.47µF 50V MS7

Downloaded from www.Manualslib.com manuals search engine

[CTRL UNIT] (IC-275H ONLY)

REF. NO.	DESCRIPTION	PART NO.
C32	Electrolytic	10μF 16V MS7
C33	Ceramic	0.0047μF 50V
C34	Ceramic	220pF 50V
C35	Ceramic	0.001μF 50V
C37	Ceramic	0.001μF 50V
C38	Feed Through	TF318-450 E 102 GMV 50V
C39	Feed Through	TF318-450 E 102 GMV 50V
J1	Connector	B10B-EH-S
J2	Connector	B06B-EH-S
J3	Connector	B05B-EH-S
J4	Connector	B03B-EH-S
J5	Connector	B04B-EH-S
J6	Connector	TSL-P03P-V2
J7	Connector	TSL-P03P-V2
J8	Connector	LLR-6
P1	Connector	1490R-1
P2	Connector	2-S3.3
P3	Connector	2-S3.3
F1	Fuse	F.G.M.B 250V 3A
F2	Holder	F-429
EP1	P.C. Board	B-1379C
EP2	Ferrite Bead	FSQH070RN

[PA UNIT] (IC-275H)

REF. NO.	DESCRIPTION	PART NO.
IC1	IC	SC-1013
Q1	Transistor	2SD880
Q2	Transistor	2SC2694
Q3	Transistor	2SC2694
D1	Diode	MV5
D2	Diode	MV5
L1	Coil	LA-247
L2	Coil	LA-263
L3	Coil	LA-263
L4	Coil	LA-263
L5	Coil	LW-9
L6	Coil	LA-263
L7	Coil	LA-263
L8	Coil	LA-300 (43752)
L9	Coil	LW-33
L10	Coil	LA-179
R1	Resistor	100Ω CRH200 R02J
R2	Resistor	100Ω CRH200 R02J
R3	Resistor	330Ω ELR20
R4	Trimmer	470Ω RH0651CS2J1HA
R5	Resistor	33Ω R20
R6	Thermistor	35D45
R7	Resistor	10kΩ R25
R8	Resistor	10kΩ R25
C1	Ceramic	220pF 50V

[PA UNIT] (IC-275H)

REF. NO.	DESCRIPTION	PART NO.
C2	Ceramic	220pF 50V
C3	Barrier Layer	0.047μF 25V
C4	Ceramic	220pF 50V
C5	Ceramic	22pF 500V
C7	Ceramic	39pF 500V
C9	Ceramic	39pF 500V
C10	Ceramic	22pF 500V
C11	Ceramic	24pF 500V
C12	Trimmer	70pF TYPE (C)
C13	Ceramic	10pF 500V
C14	Monolithic	135pF UC342H1350J
C15	Monolithic	135pF UC342H1350J
C16	Monolithic	140pF UC342H1400J
C17	Monolithic	140pF UC342H1400J
C18	Monolithic	200pF UC342H2000J
C19	Monolithic	68pF UC232H0680F
C21	Monolithic	47pF UC232H0470F
C22	Trimmer	15pF TMC-210SLD
C23	Ceramic	27pF DE0705SL270J 1K
C24	Ceramic	220pF 50V
C25	Electrolytic	47μF 25V
C26	Electrolytic	47μF 25V
C27	Ceramic	220pF 50V
C28	Ceramic	220pF 50V
C29	Ceramic	220pF 50V
C30	Barrier Layer	0.047μF 25V
C31	Feed Through	TF240-602SSC332Z 50V
C32	Feed Through	TF240-602SSC332Z 50V
C33	Feed Through	TF240-602SSC332Z 50V
C34	Feed Through	TF240-602SSC332Z 50V
C35	Feed Through	TF240-602SSC332Z 50V
C36	Feed Through	TF240-602SSC332Z 50V
C37	Feed Through	TF240-602SSC332Z 50V
C38	Feed Through	TF240-602SSC332Z 50V
C39	Ceramic	220pF 50V
C40	Electrolytic	2.2μF 50V MS7
C41	Barrier Layer	0.1μF 16V
J1	Connector	TMP-J01X-V2
J2	Connector	TLB-P05H-B1
J3	Connector	TMP-J01X-A2
J4	Connector	P-423
P1	Connector	TMP-P01X-A1
P2	Connector	EHR-06
P3	Connector	EHR-03
P4	Connector	SMR-10V-B
P5	Connector	EHR-10
P6	Connector	EHR-03
S1	Thermal	OHD3-50M
S2	Thermal	OHD3-90M
SP1	Speaker	065K12I0810
MF1	Motor	HMK2605-01-130
EP10	P.C. Board	B-1380B
W1	Jumper	JPW-02A
W3	Jumper	JPW-02A

Downloaded from www.Manualslib.com manuals search engine

[FILTER UNIT] (IC-275H ONLY)

REF. NO.	DESCRIPTION	PART NO.	
D1	Diode	1SS99	
D2	Diode	1SS99	
D3	Diode	1N4002	
D4	Diode	RD12E B2	
D5	Diode	1SS133	
D6	Diode	1SS133	
D7	Diode	MI-301	
L1	Coil	LW-9	
L2	Coil	LA-176	
L3	Coil	LA-177	
L4	Coil	LA-177	
R1	Resistor	82Ω	R20
R2	Resistor	82Ω	R20
R3	Resistor	1kΩ	R20
R4	Resistor	1kΩ	R20
R9	Resistor	2.2kΩ	R20
R10	Resistor	2.2kΩ	R20
R11	Resistor	10kΩ	R20
R12	Resistor	56Ω	R20
R13	Resistor	56Ω	R20
R14	Resistor	56Ω	R20
R15	Resistor	47Ω	R20
R16	Resistor	10kΩ	R20
R17	Resistor	10kΩ	R20
C1	Ceramic	220pF	50V
C3	Ceramic	220pF	50V
C4	Ceramic	220pF	50V
C5	Ceramic	0.001μF	500V
C6	Ceramic	12pF	500V
C7	Ceramic	10pF	500V
C8	Ceramic	27pF	500V
C9	Ceramic	3pF	500V
C10	Ceramic	33pF	500V
C11	Ceramic	0.5pF	500V
C12	Ceramic	18pF	500V
C13	Ceramic	10pF	500V
C14	Ceramic	220pF	50V
C15	Barrier Layer	220pF	50V
C16	Electrolytic	4.7μF	50V
C17	Ceramic	220pF	50V
C18	Ceramic	220pF	50V
C19	Ceramic	220pF	50V
C20	Ceramic	220pF	50V
C21	Ceramic	220pF	50V
C22	Ceramic	220pF	50V
C23	Barrier Layer	0.047μF	25V
C24	Ceramic	220pF	50V
RL1	Relay	NR-HD-6V	
J1	Connector	MR-DS-E01	
J2	Connector	TLB-P05H-B1	
P1	Connector	TMP-P01X-A1	
P2	Connector	EHR-05	
P3	Connector	TMP-P01X-A1	
EP1	P.C. Board	B-1381B	
W1	Jumper	JPW-02H	
W2	Jumper	JPW-02H	
W3	Jumper	JPW-02H	

Downloaded from www.Manualslib.com manuals search engine

IC-275H SCHEMATIC DIAGRAM

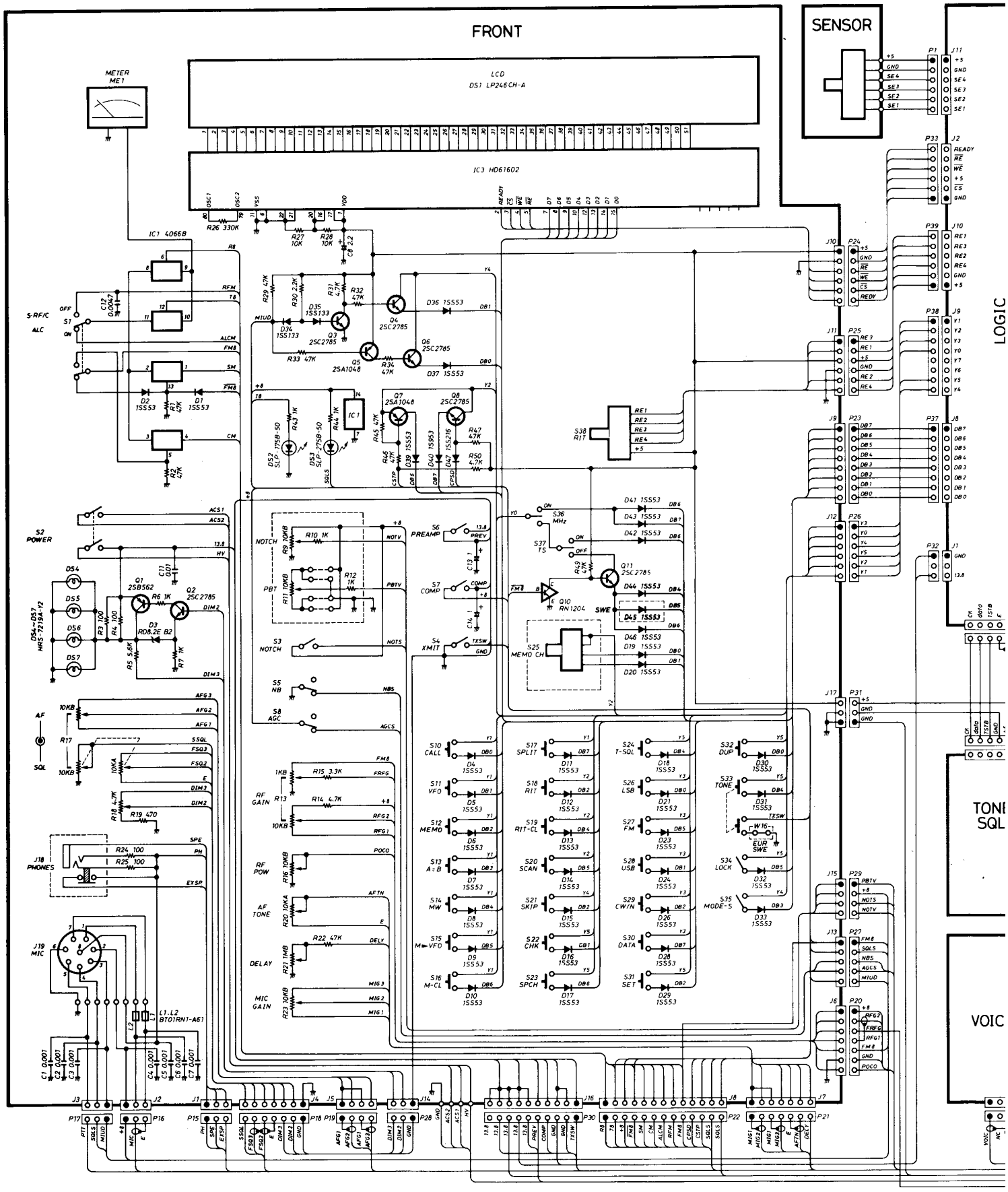

Downloaded from www.Manualslib.com manuals search engine

RAM

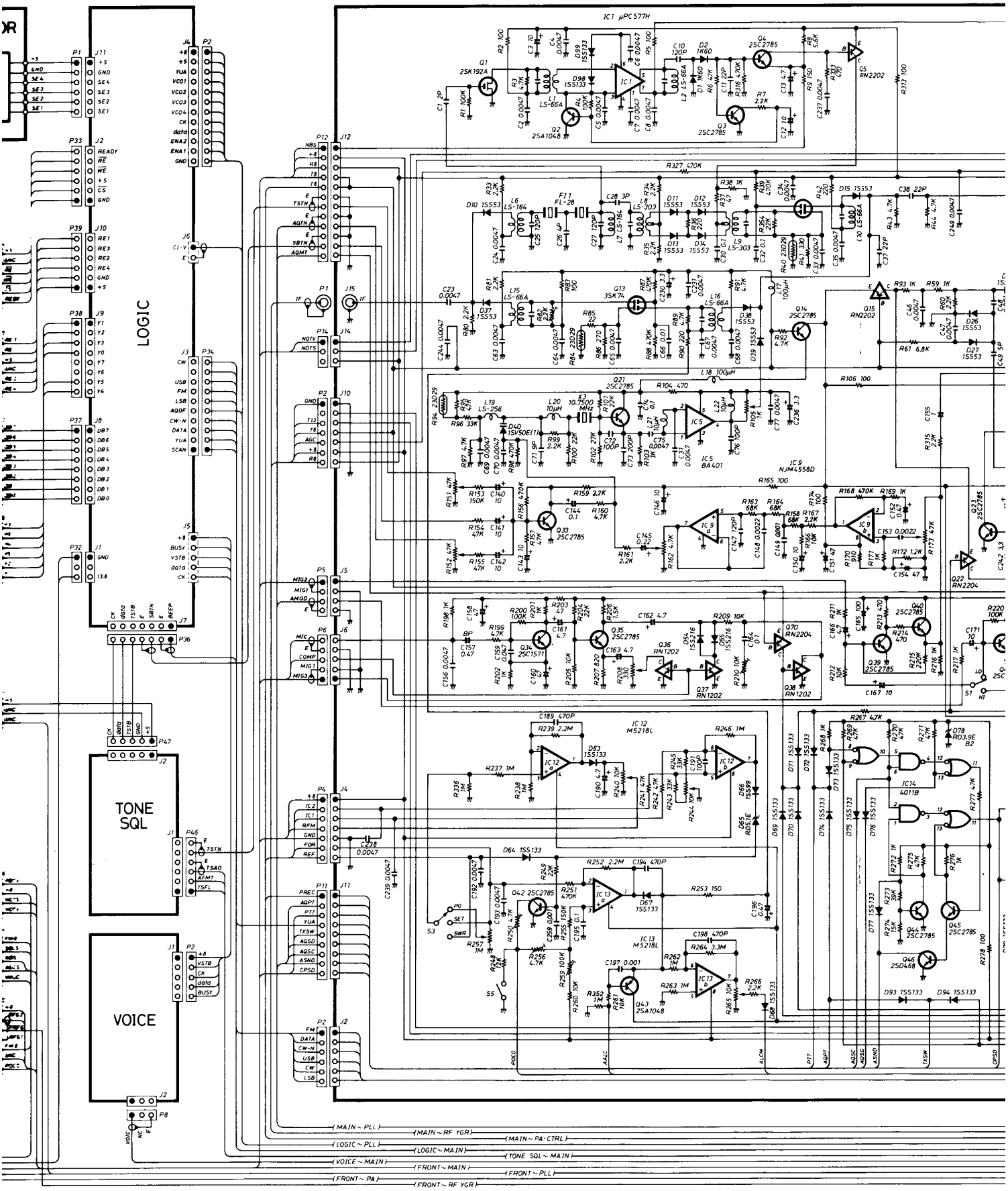

Downloaded from www.Manualslib.com manuals search engine

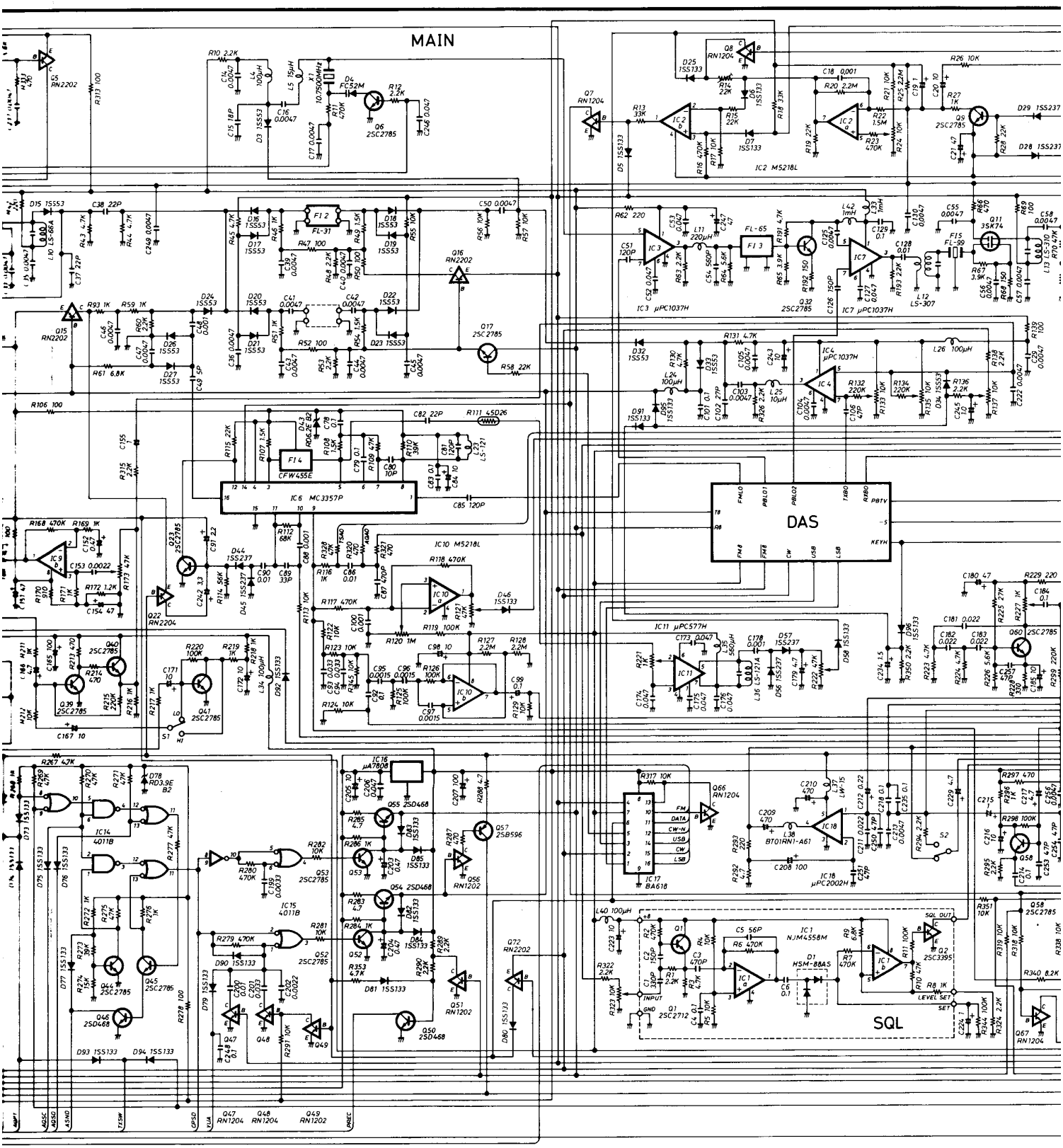

Downloaded from www.Manualslib.com manuals search engine

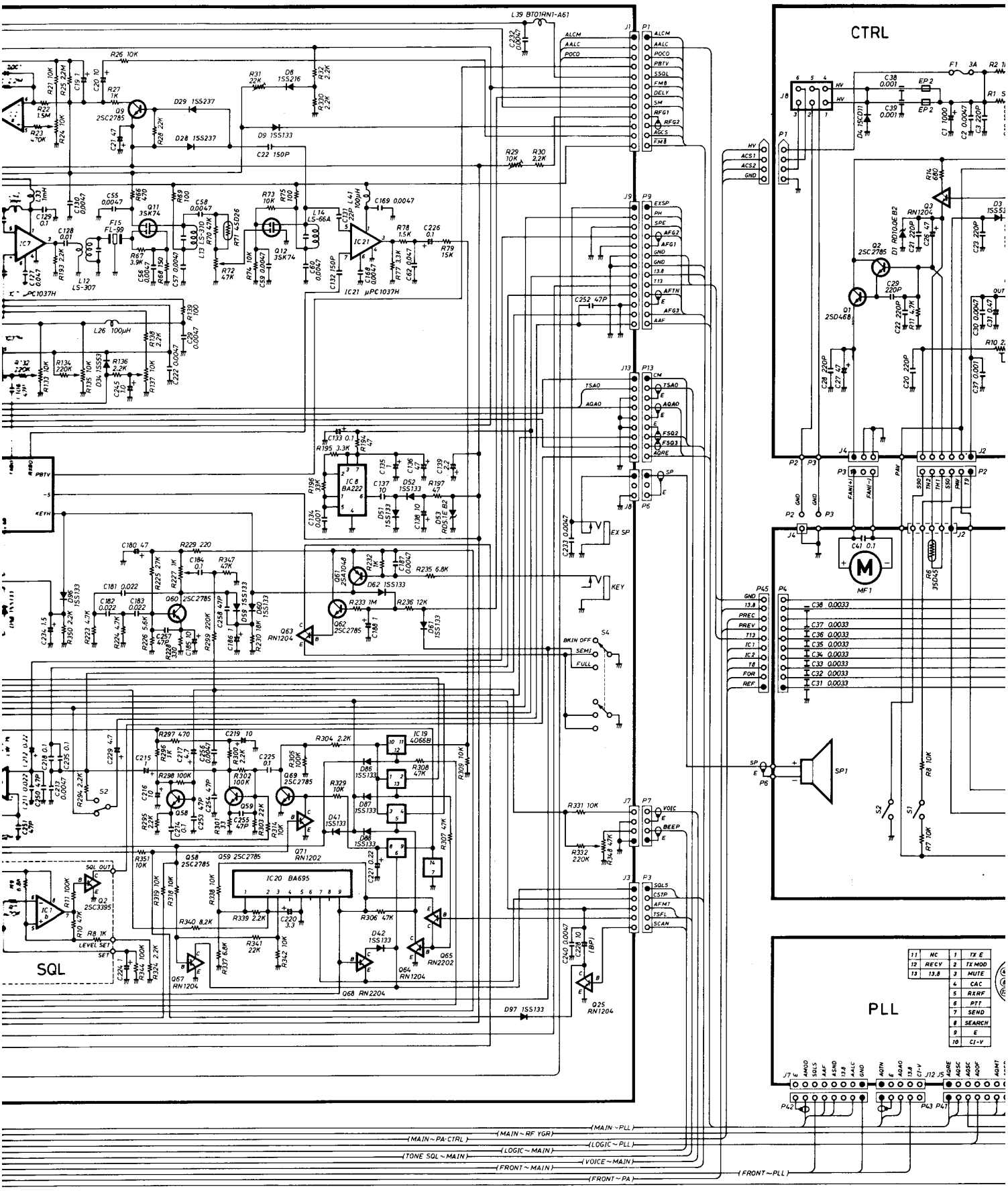

ICOM ICOM

Downloaded from www.Manualslib.com manuals search engine

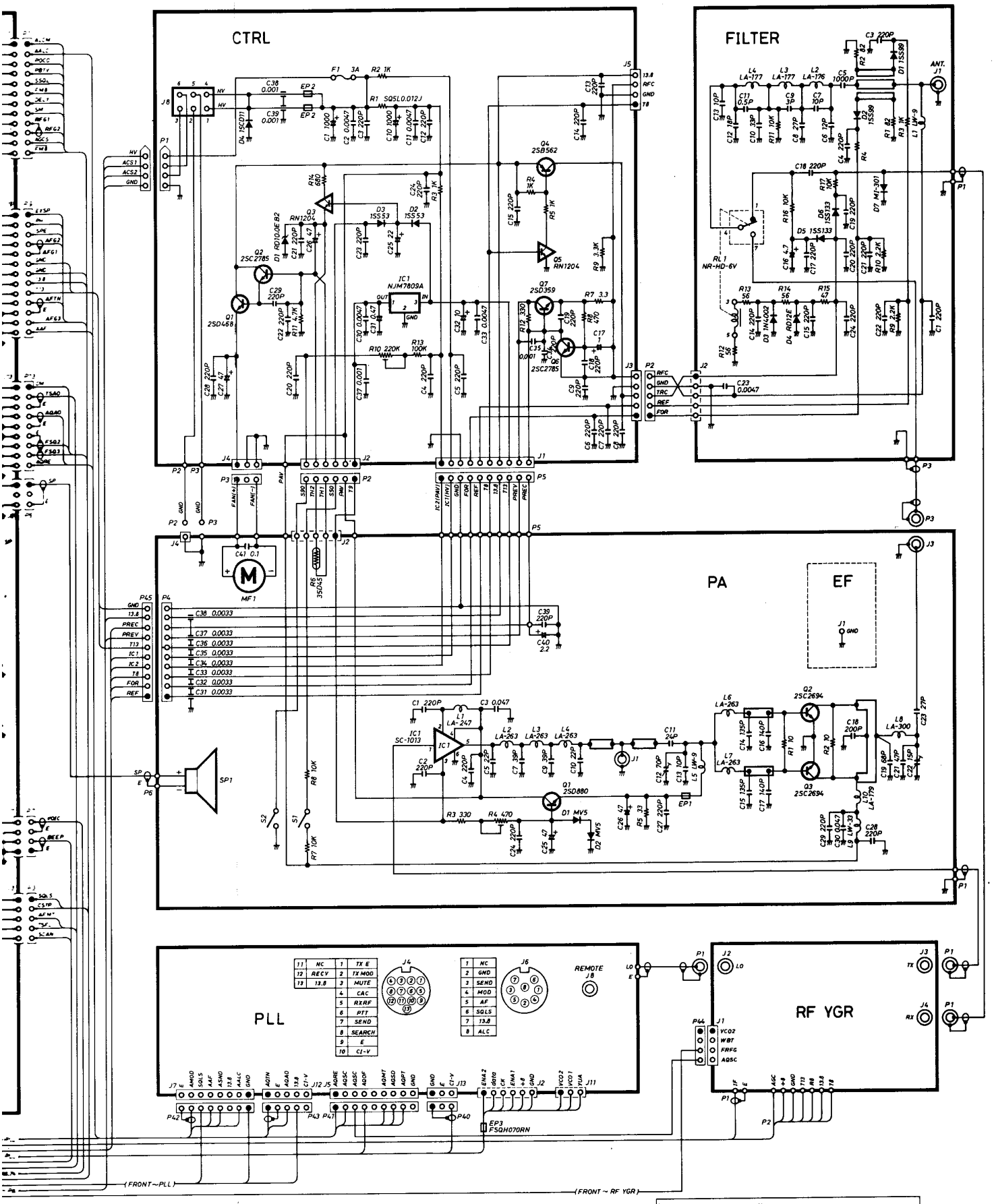

ICOM INCORPORATED

To upgrade quality, some components may be subject to change without notice.

A-0950

Downloaded from www.Manualslib.com manuals search engine

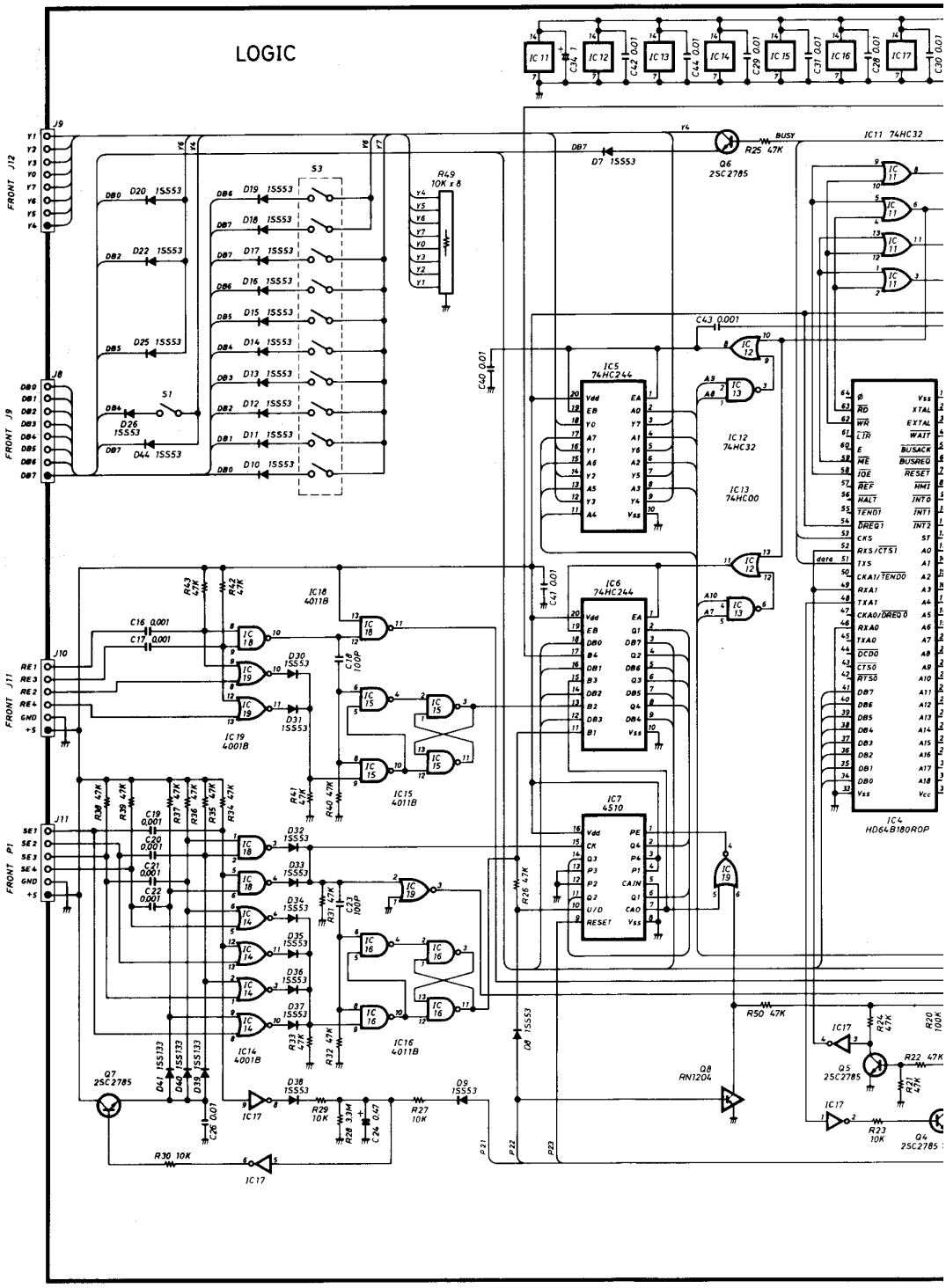

Downloaded from www.Manualslib.com manuals search engine

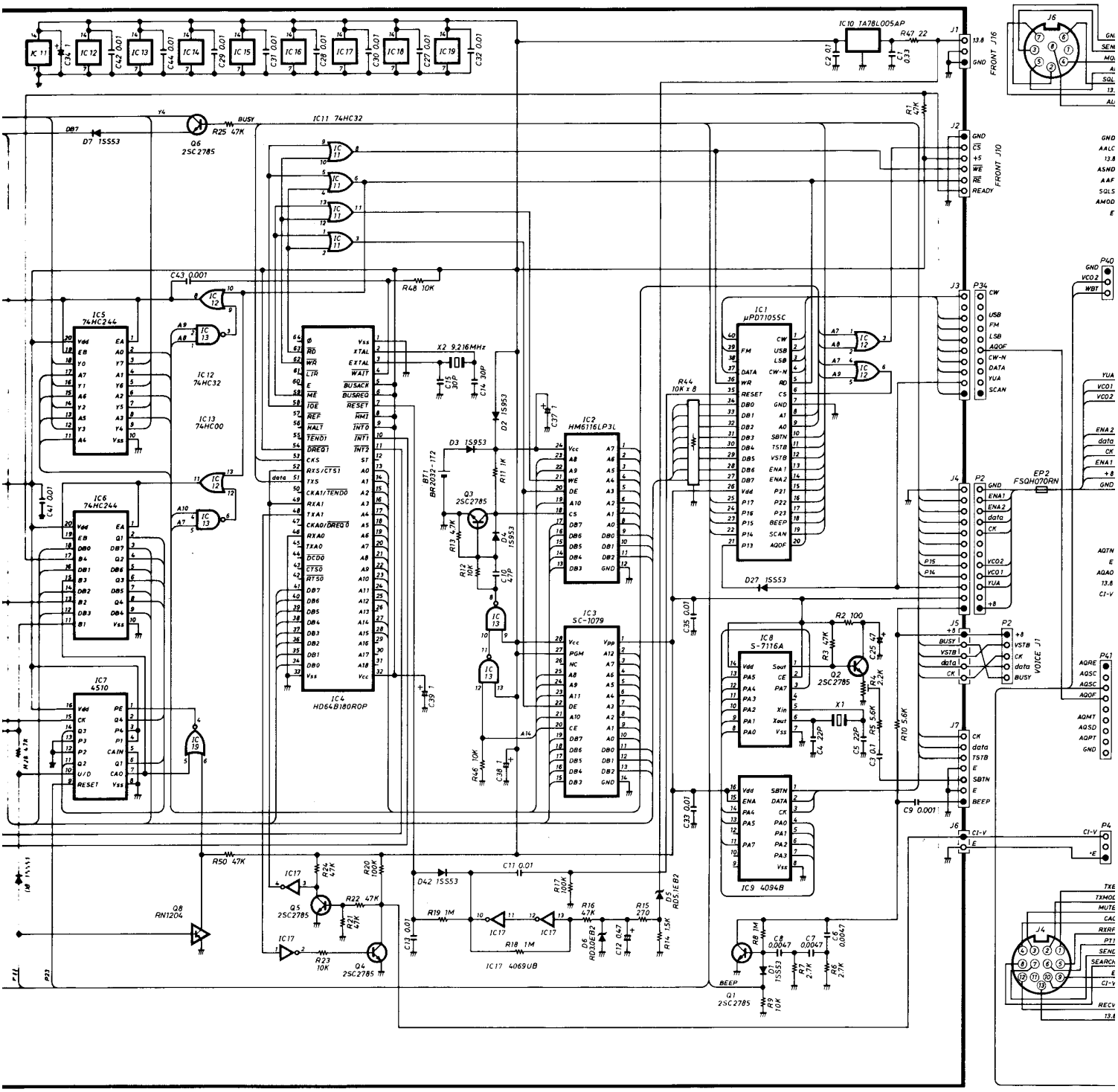

Downloaded from www.Manualslib.com manuals search engine

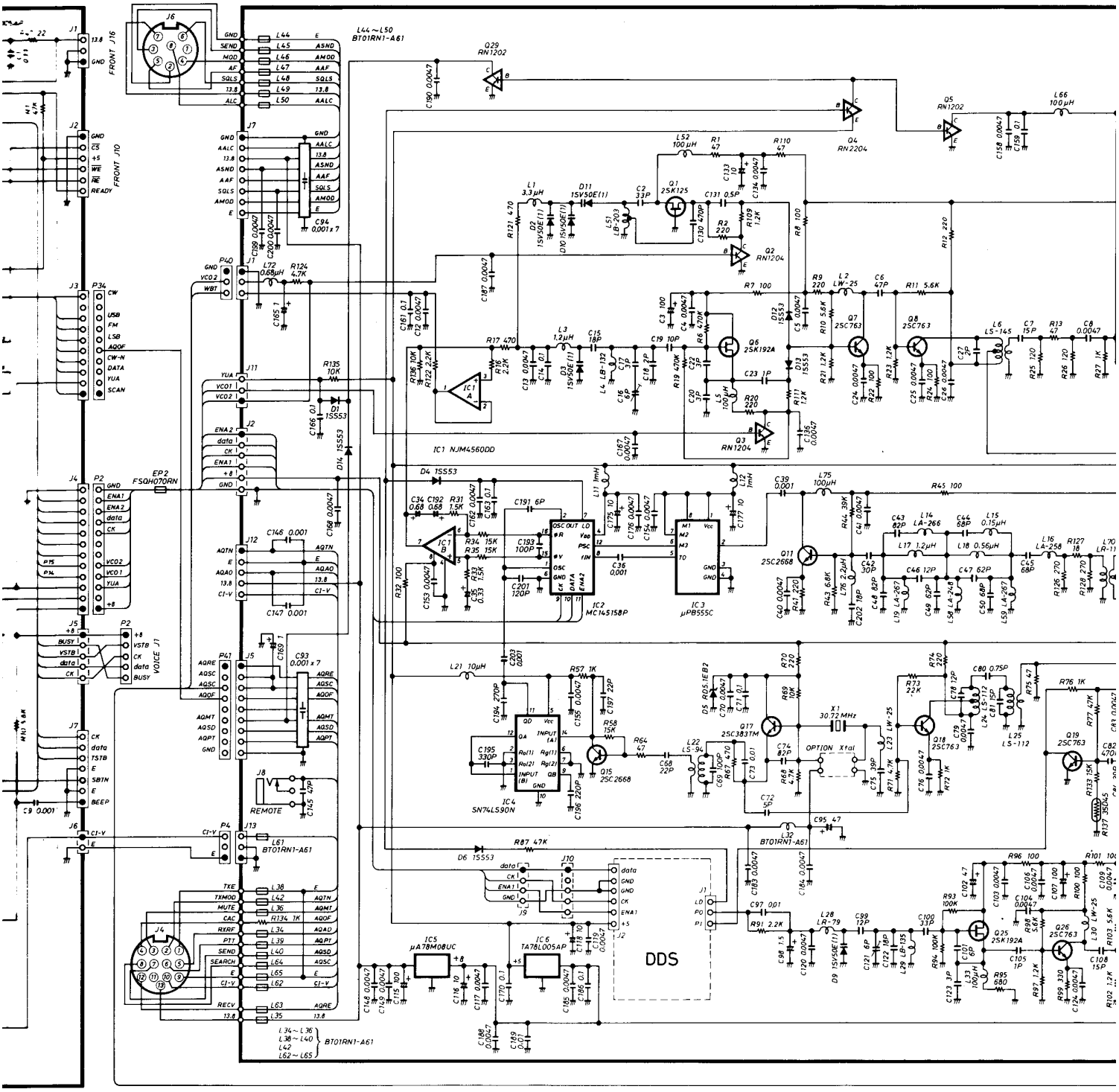

Downloaded from www.Manualslib.com manuals search engine

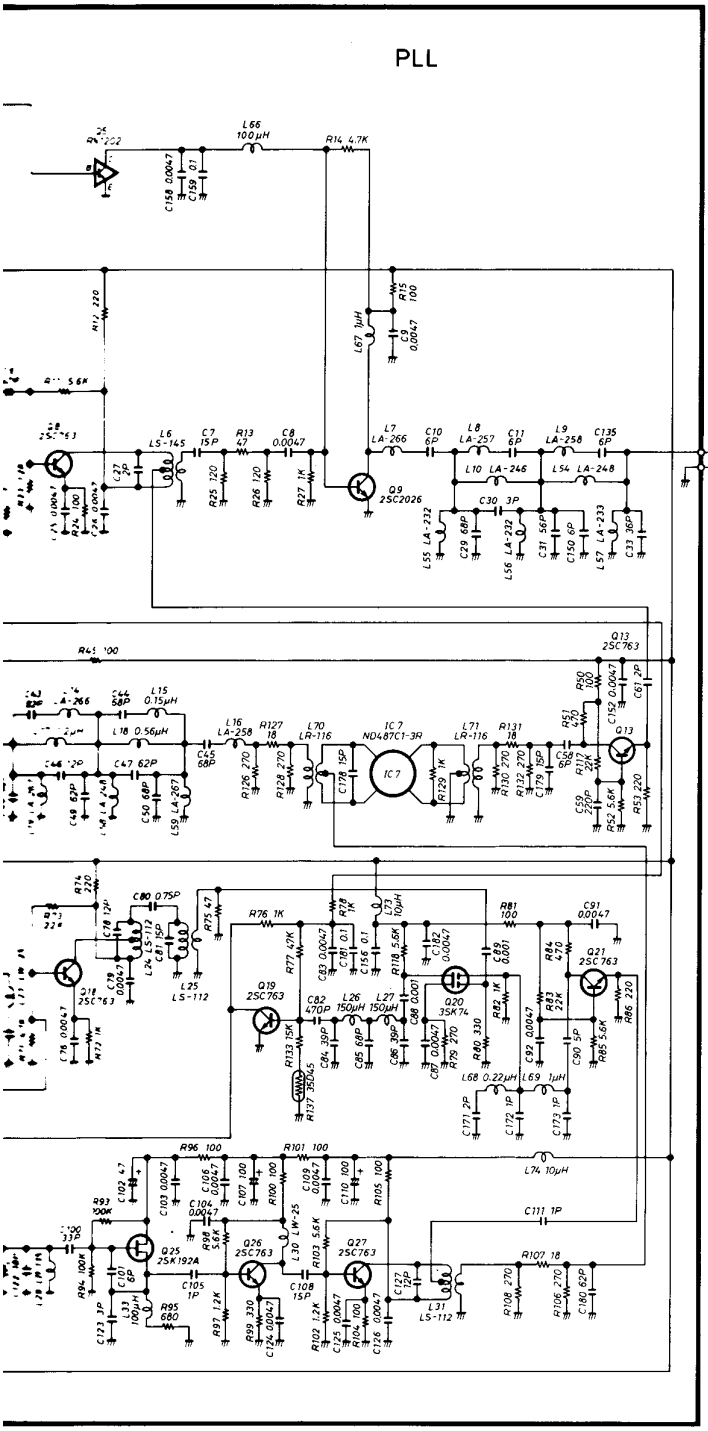

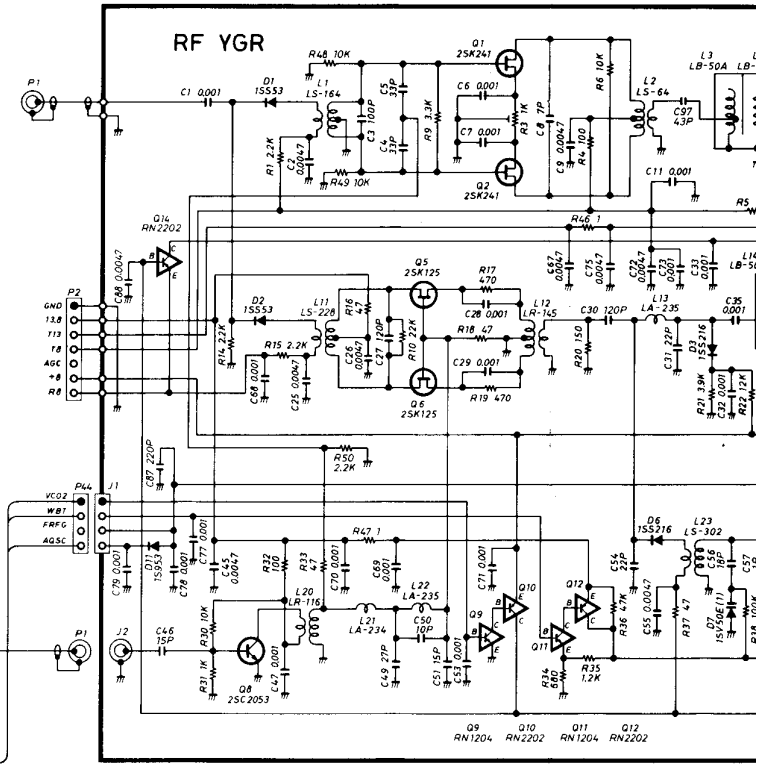

Downloaded from www.Manualslib.com manuals search engine

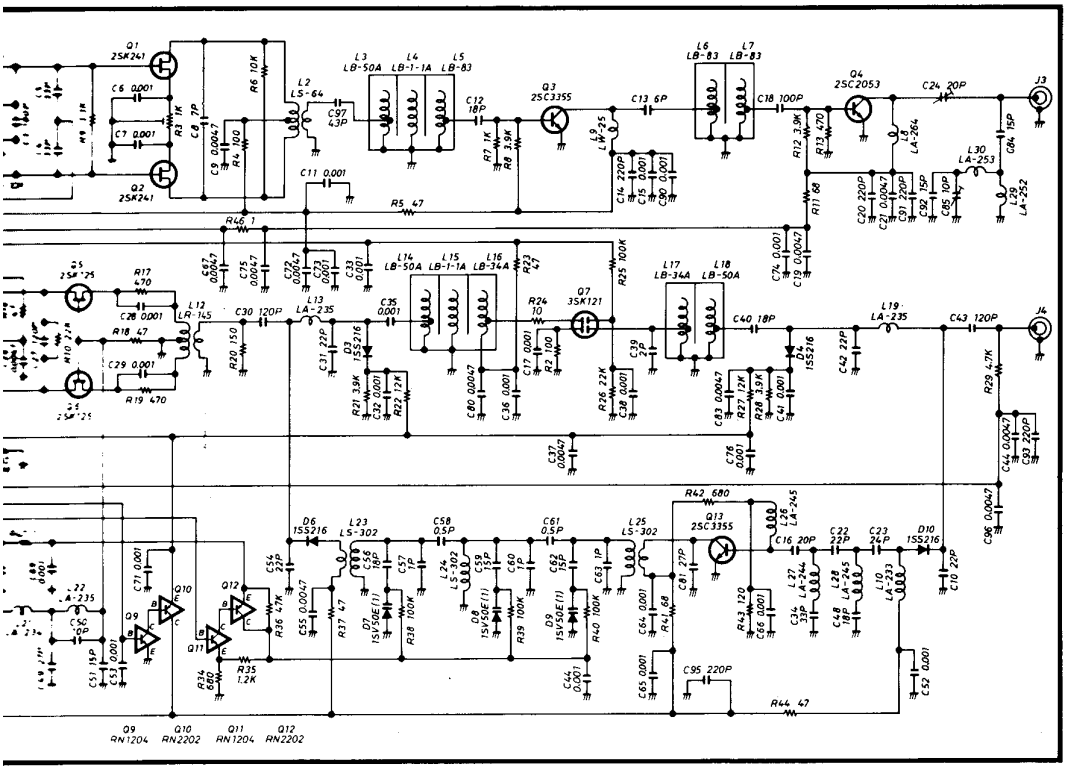

Downloaded from www.Manualslib.com manuals search engine

IC-275A/E SCHEMATIC DIAG

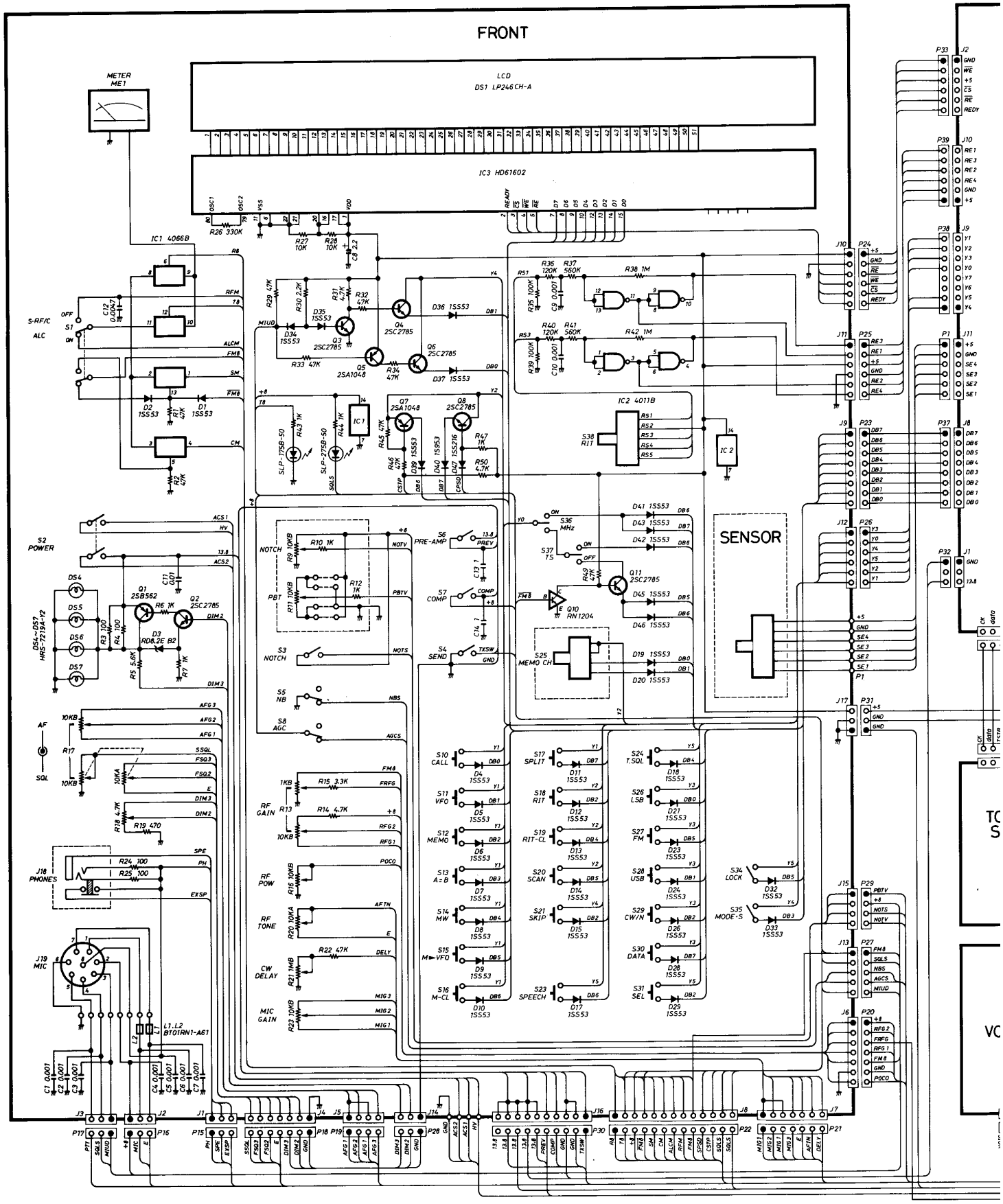

Downloaded from www.Manualslib.com manuals search engine

C DIAGRAM

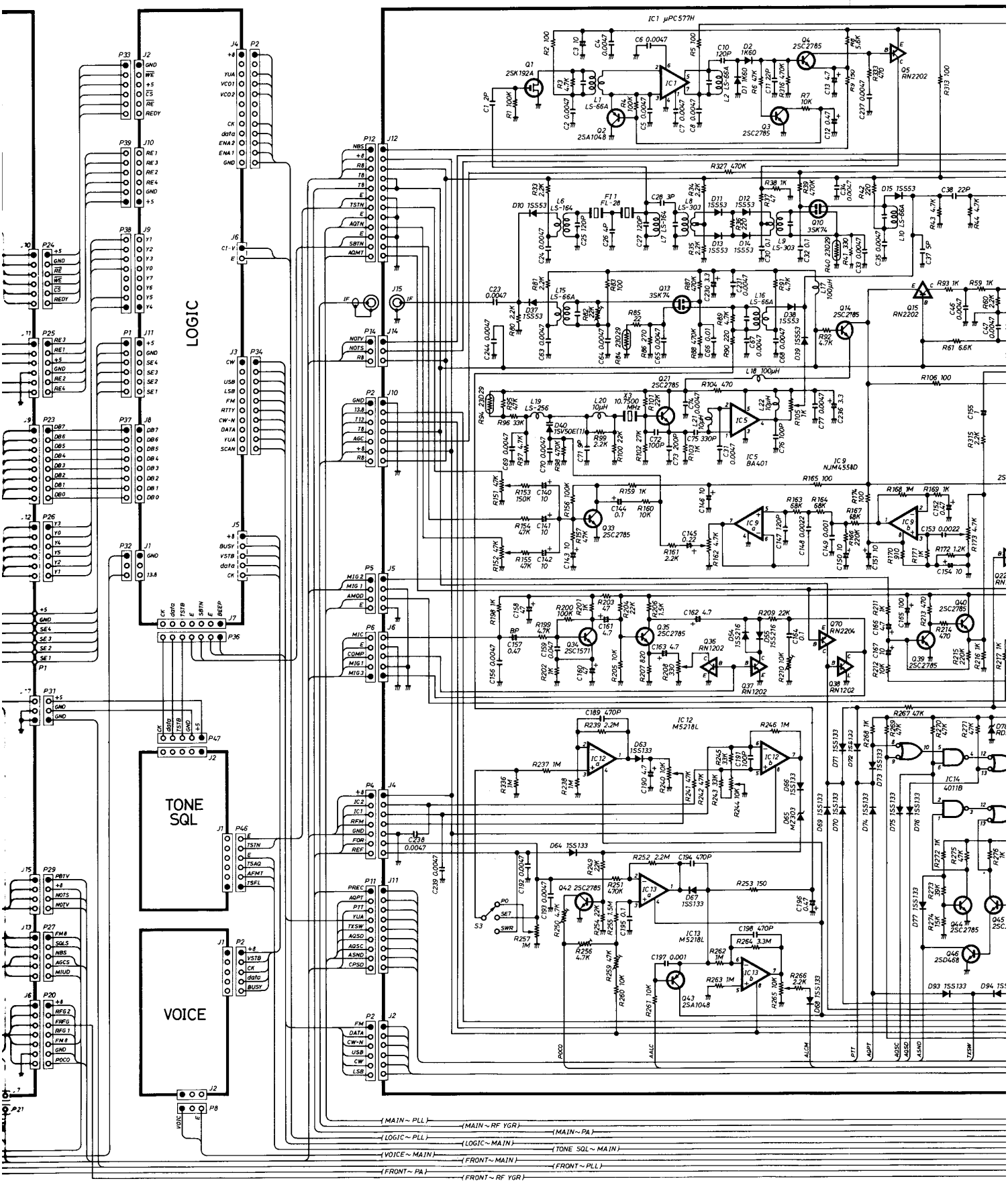

Downloaded from www.Manualslib.com manuals search engine

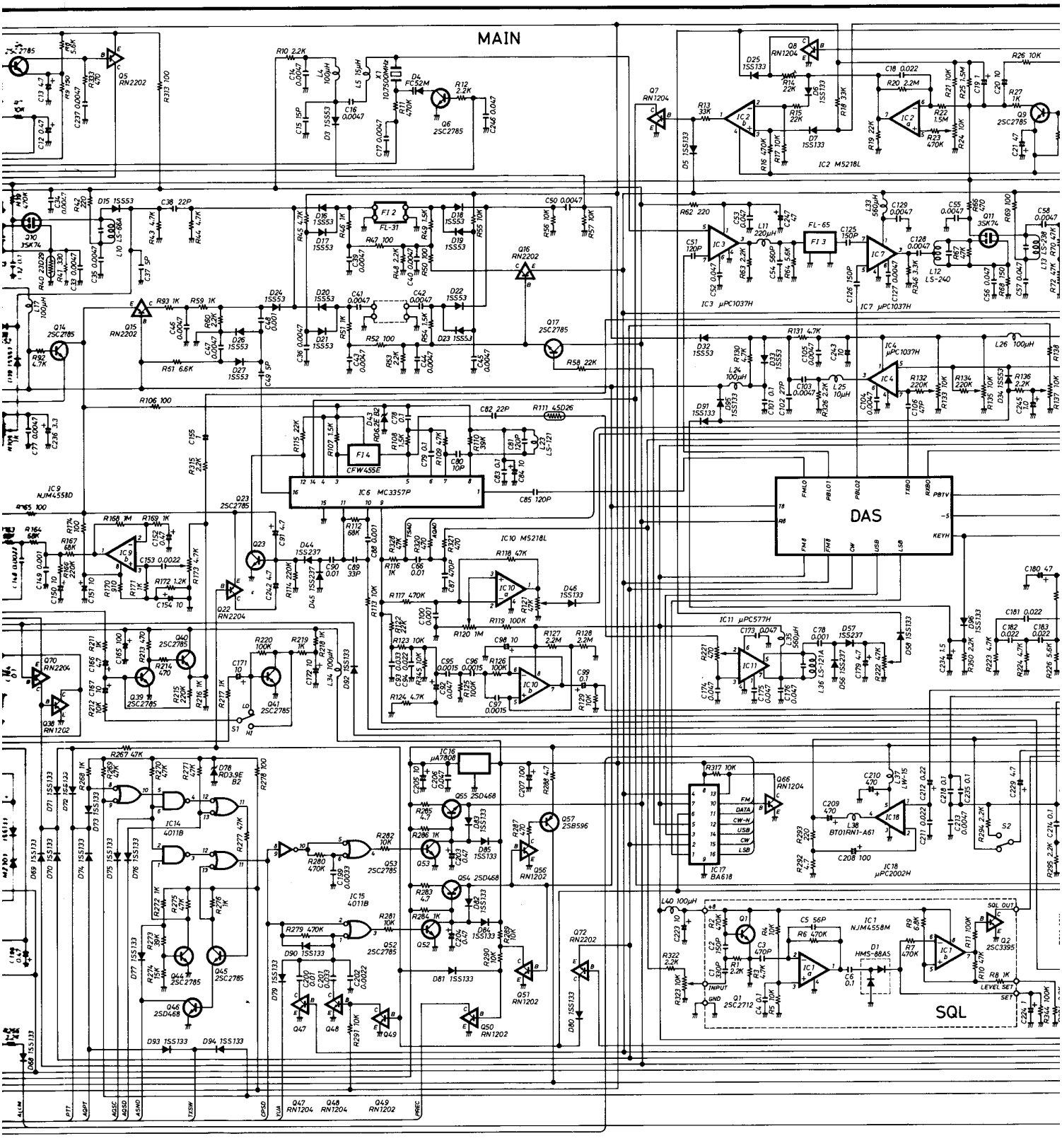

Downloaded from www.Manualslib.com manuals search engine

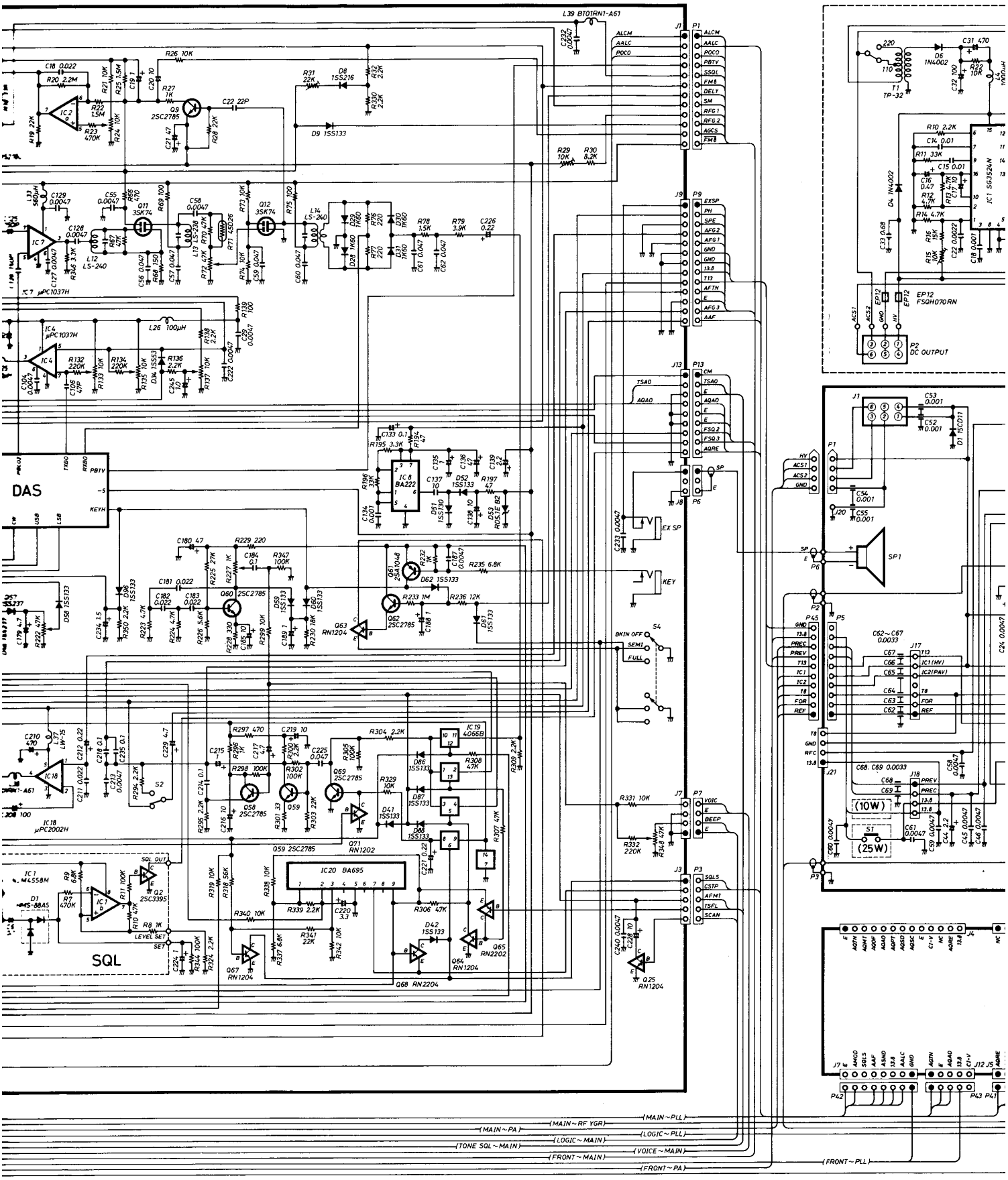

ICOM ICOM INCOR

Downloaded from www.Manualslib.com manuals search engine

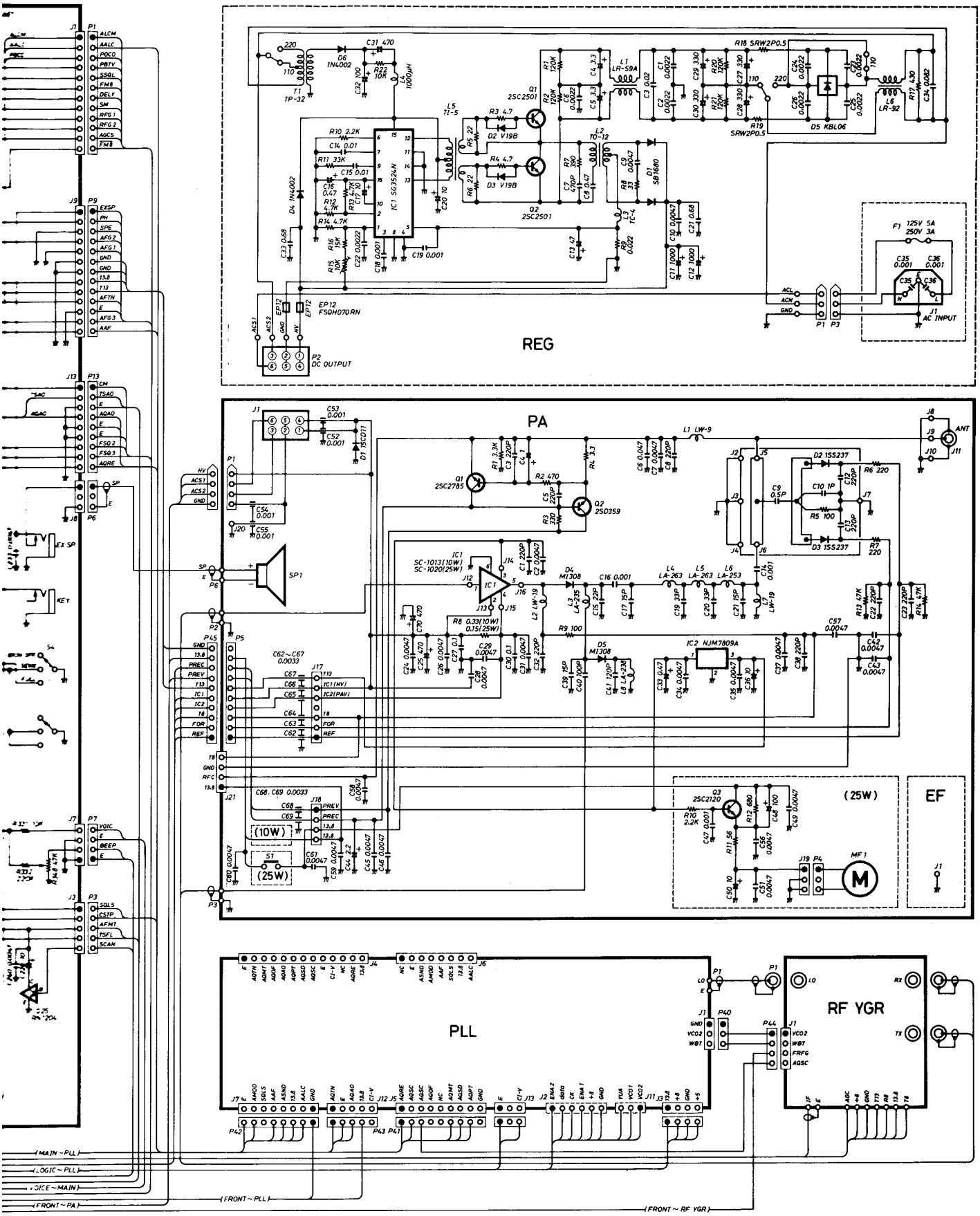

ICOM INCORPORATED

To upgrade quality, some components may be subject to change without notice.

A-0851

Downloaded from www.Manualslib.com manuals search engine

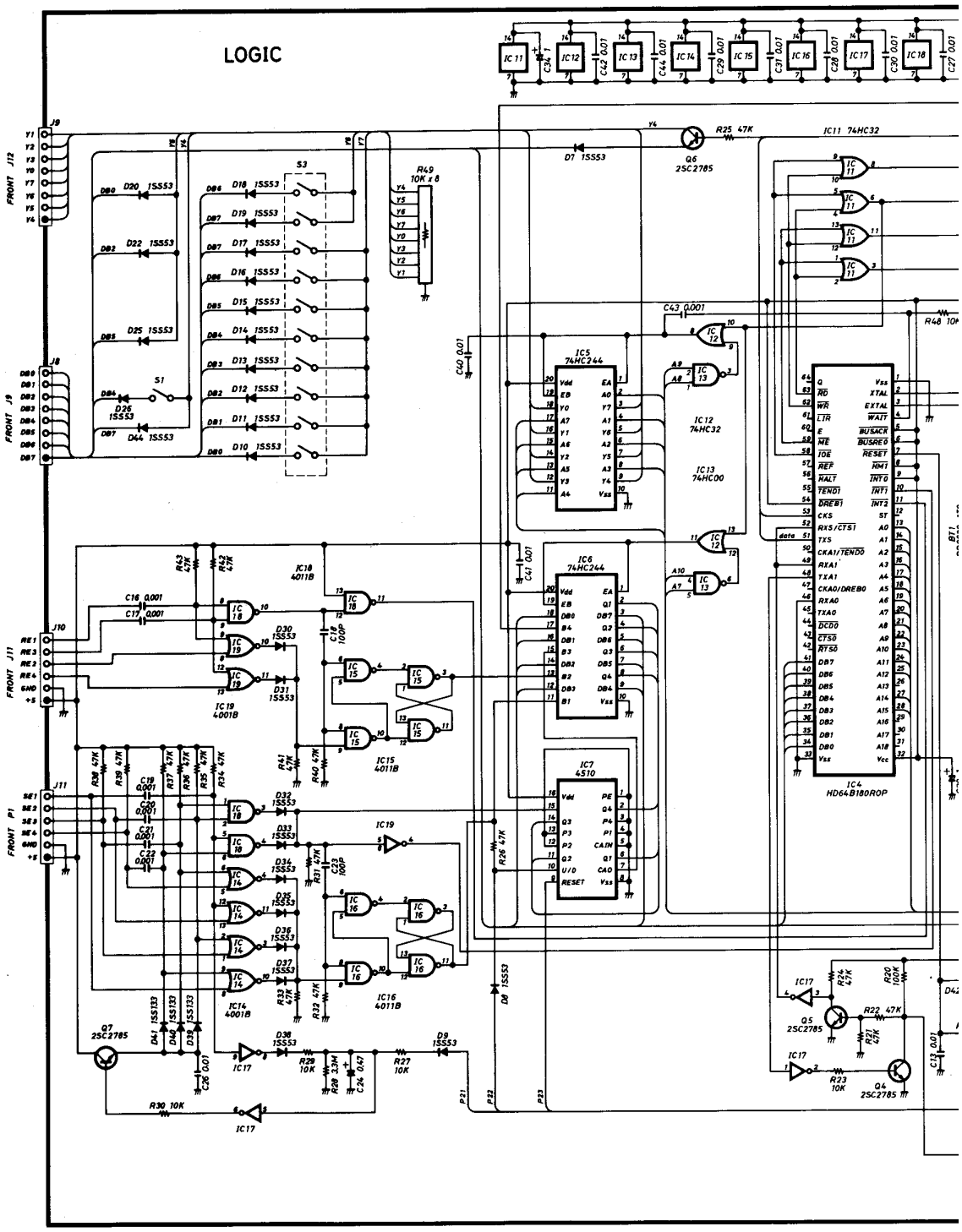

Downloaded from www.Manualslib.com manuals search engine

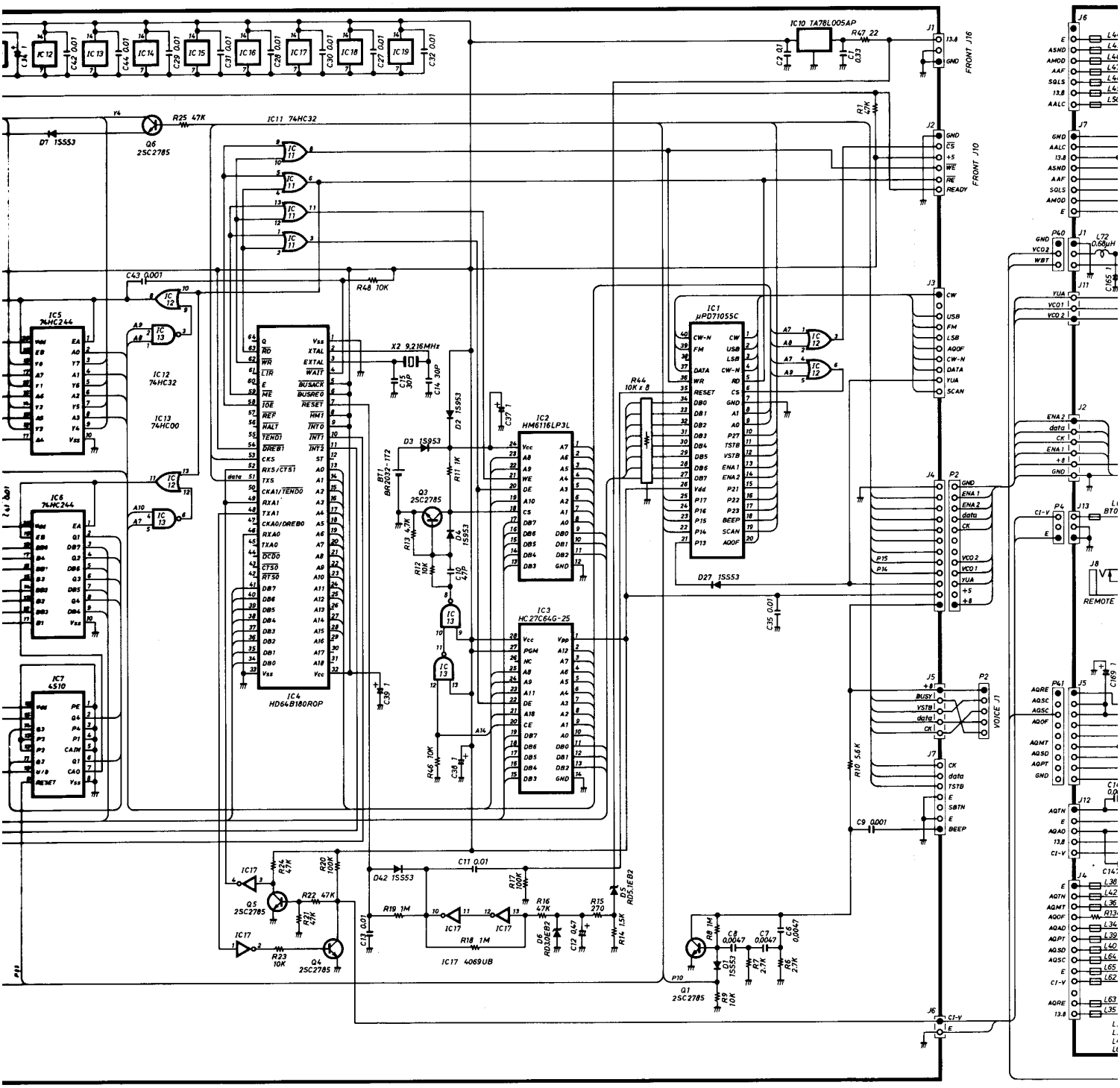

Downloaded from www.Manualslib.com manuals search engine

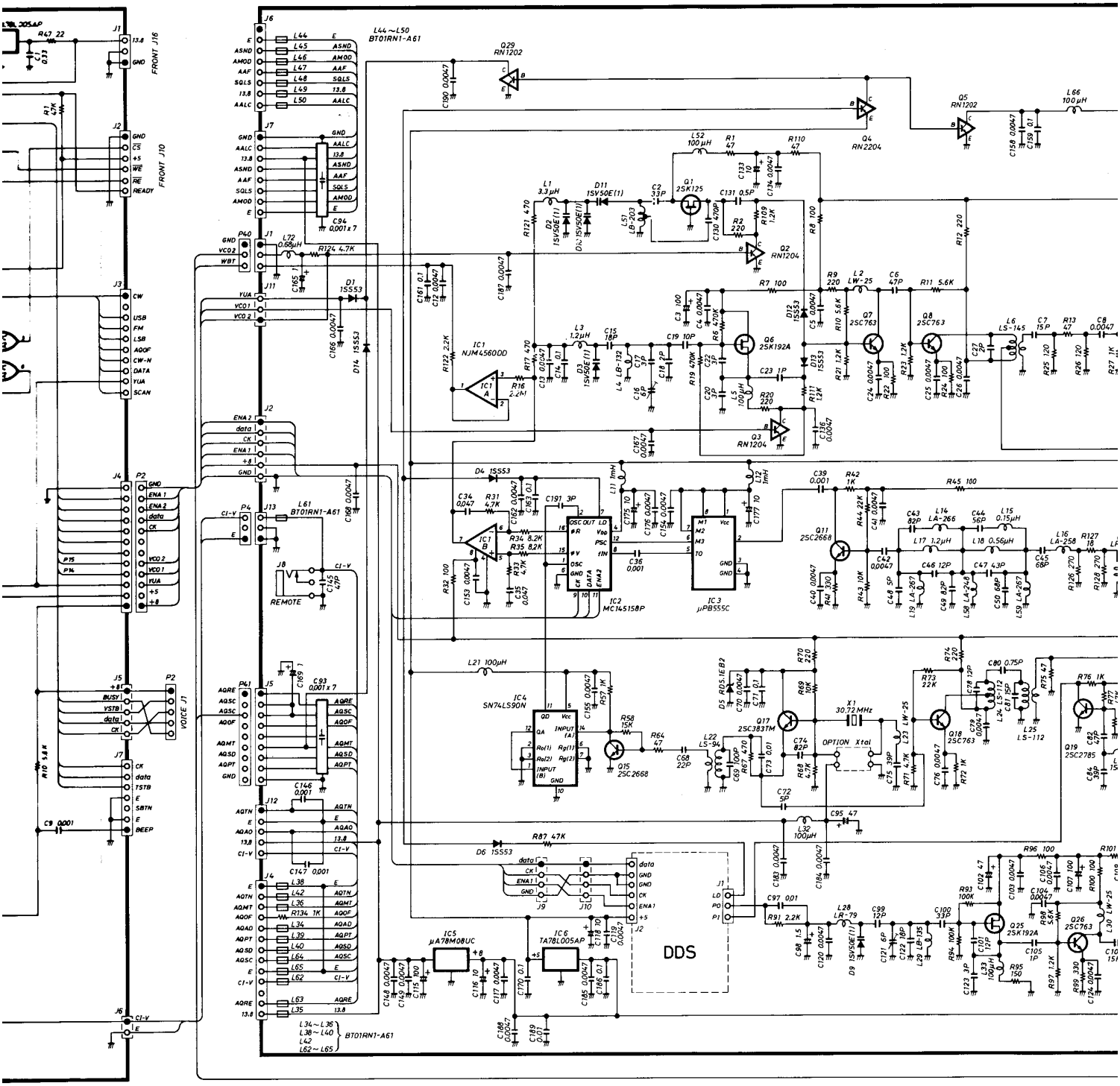

Downloaded from www.Manualslib.com manuals search engine

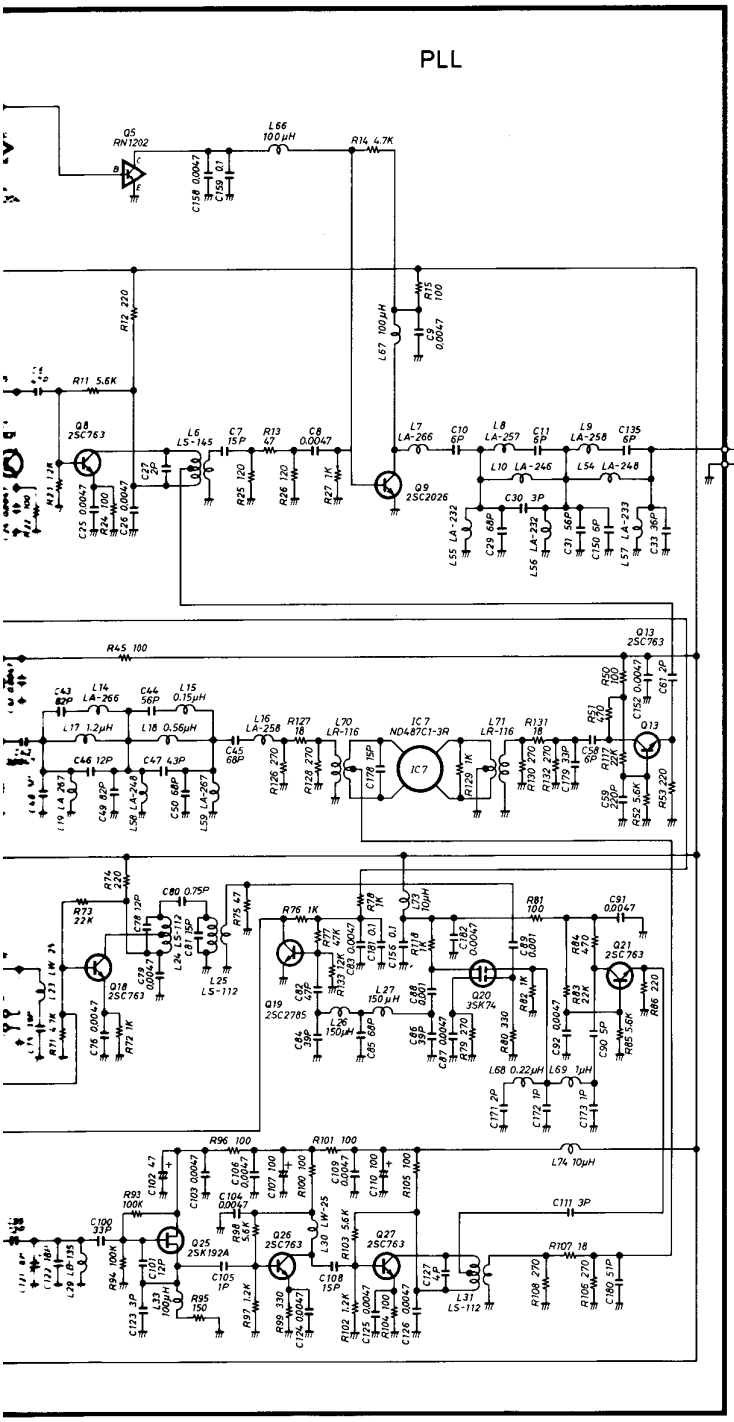

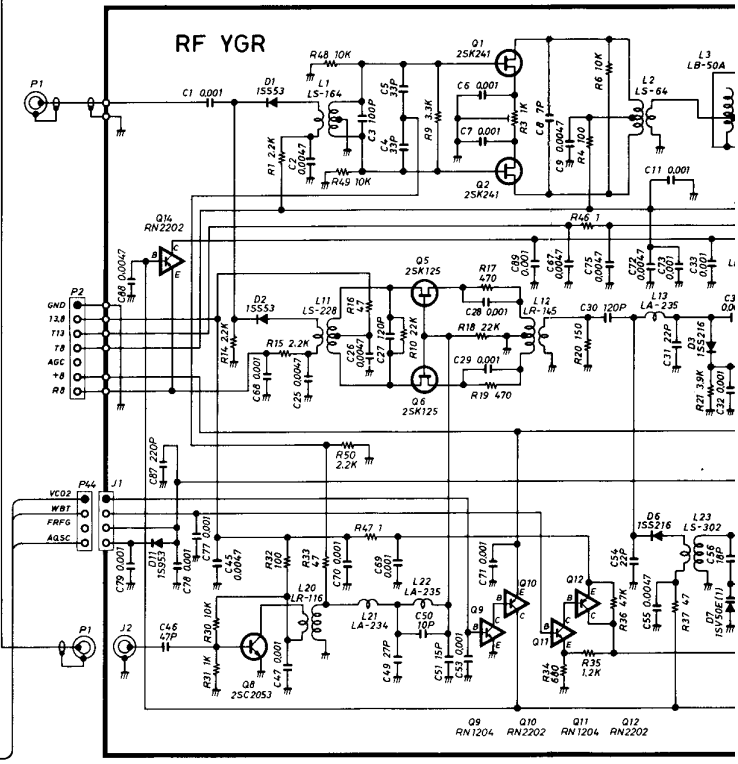

Downloaded from www.Manualslib.com manuals search engine

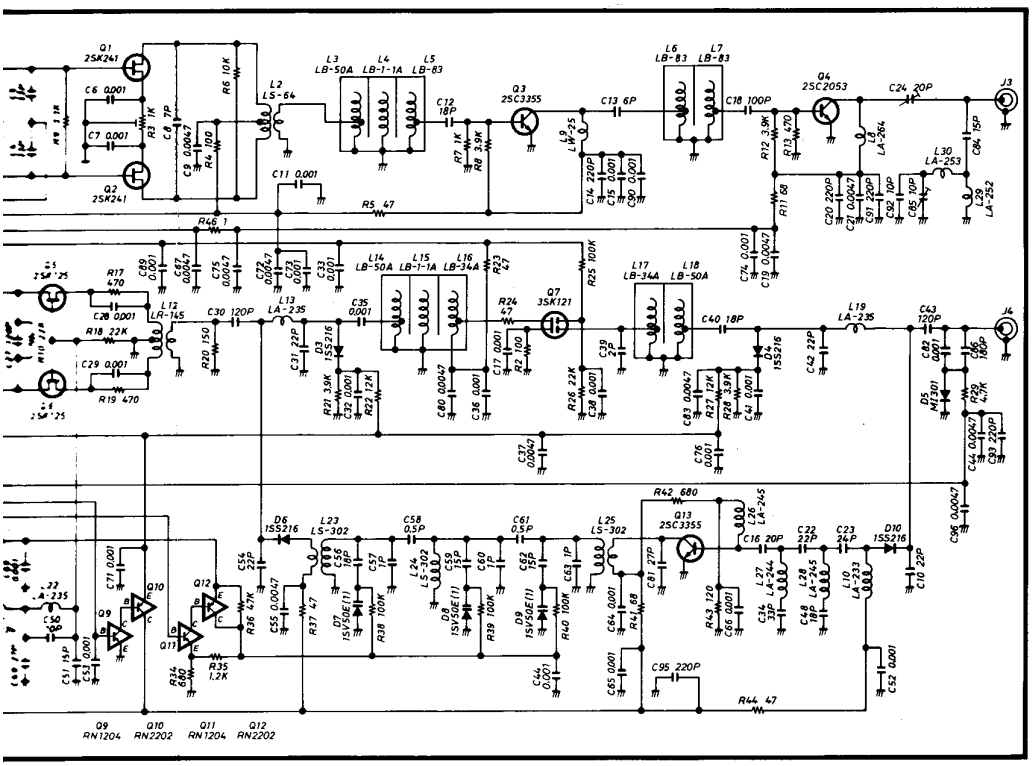

Downloaded from www.Manualslib.com manuals search engine

ICOM

ICOM INCORPORATED

1-6-19, Kamikuratsukuri, Hirano-ku, Osaka 547, Japan
Phone: (06) 793-5301
Fax : (06) 793-0013
Telex : 05277822 ICOMTR J

ICOM AMERICA, INC.
2380 116th Avenue N.E.,
Bellevue, WA 98004
Phone: (206) 454-8155
Fax : (206) 454-1509
Telex : 230-152210 ICOM AMER BVUE

3150 Premier Drive, Suite 126,
Irving, TX 75063
Phone: (214) 550-7525
Fax : (214) 550-7423

1777 Phoenix Parkway, Suite 201,
Atlanta, GA 30349
Phone: (404) 991-6166
Fax : (404) 991-6327

ICOM CANADA, LTD.
3071-#5 Road, Unit 9,
Richmond, B.C.,
Canada V6X 2T4
Phone: (604) 273-7400
Fax : (604) 273-1900

ICOM (EUROPE) GmbH
Himmelgeister Strasse 100,
4000 Düsseldorf 1,
West Germany
Phone: 0211-346047
Fax : 0211-333639
Telex : 41-8588082 ICOM D

ICOM AUSTRALIA, PTY., LTD.
7 Duke Street, Windsor 3181,
Victoria, Australia
Phone: (03) 529-7582
Fax : (03) 529-8485
Telex : 71-35521 ICOMAS

ICOM FRANCE S.A.
BP-4063, 120 Route de Revel,
31029 Toulouse CEDEX,
France
Phone: 61.20.31.49
Fax : 61.34.05.91
Telex : 521515 ICOMFRA

ICOM (UK) LIMITED
Unit 9, Sea Street,
Herne Bay, Kent, CT6 8LD
England, U.K.
Phone: (0227) 363859
Fax : (0227) 360155
Telex : 965179 ICOM G

Downloaded from www.Manualslib.com manuals search engine