ICOM

SERVICE MANUAL

144MHz FM TRANSCEIVER

IC-2100H
IC-2100-T

Icom Inc.

INTRODUCTION

This service manual describes the latest service information for the **IC-2100H/IC-2100-T** 144 MHz FM TRANSCEIVER at the time of publication.

MODEL	VERSION	SYMBOL
IC-2100H	Europe	EUR
	Italy	ITA
	Taiwan	TPE
	U.S.A	USA
	Asia	SEA
	Latin America	LA
IC-2100-T	Thailand	THA

To upgrade qualty, any electrical or mechanical parts and internal circuits are subject to chang without notice or obligation

DANGER

NEVER connect the transceiver to an AC outlet or to a DC power supply that uses more than 16 V. This will ruin the transceiver.

DO NOT expose the transceiver to rain, snow or any liquids.

DO NOT reverse the polarities of the power supply when connecting the transceiver.

DO NOT apply an RF signal of more than 20 dBm (100mW) to the antenna connector. This could damage the transceiver's front end.

ORDERING PARTS

Be sure to include the following four points when ordering replacement parts:

1. 10-digit order numbers
2. Component part number and name
3. Equipment model name and unit name
4. Quantity required

<SAMPLE ORDER>

1110002550 IC	TA725AP	IC-2100H	MAIN UNIT	5 pieces
8810008660 Screw	PH BO M3x8 NI	IC-2100H	Chassis	10 pieces

Addresses are provided on the inside back cover for your convenience.

REPAIR NOTES

1. Make sure a problem is internal before disassembling the transceiver.
2. **DO NOT** open the transceiver until the transceiver is disconnected from its power source.
3. **DO NOT** force any of the variable components. Turn them slowly and smoothly.
4. **DO NOT** short any circuits or electronic parts. An insulated turning tool **MUST** be used for all adjustments.
5. **DO NOT** keep power ON for a long time when the transceiver is defective.
6. **DO NOT** transmit power into a signal generator or a sweep generator.
7. **ALWAYS** connect a 50 dB to 60 dB attenuator between the transceiver and a deviation meter or spectrum analyzer when using such test equipment.
8. **READ** the instructions of test equipment thoroughly before connecting equipment to the transceiver.

TABLE OF CONTENTS

SECTION 1 SPECIFICATIONS

■ GENERAL

• Frequency range :

Version	Receive	Transmit
EUR, TPE, THA	144.000 – 146.000	144.000 – 146.000
ITA, SEA, LA	136.000 – 174.000*	136.000 – 174.000*
USA	136.000 – 174.000*	140.000 – 150.000*

*Specifications guaranteed 144.000 – 148.000 MHz only

• Mode : FM
• Nomber of memory channel : 113 (incl.3pairs of scan edges, 3 log, 3 repeater and 1 call channel)
• Usable temperature range : –10°C to +60°C; +14°F to +140°F
• Frequency resolution : 5, 10, 12.5, 15, 20, 25, 30 and 50 kHz
• Frequency stability : ±10 ppm (–10°C to +60°C; +14°F to +140°F)
• Power supply requirement : 13.8 V DC ±15 % (negative ground)
• Current drain (at 13.8 V DC) :

Receive	Standby (squelched)	0.8 A
	Max. audio	1.0 A
Transmit	at 55 W	12.0 A
	at 25 W (TPE version)	7.0 A
	at 10 W (THA version)	5.5 A

• Antenna connector : SO-239 (50 Ω)
• Dimensions (projections not included) : 140(W)×40(H)×180(D) mm; 5½(W)×1 9/16(H)×7 3/32(D) inch
• Weight : 1.2 kg; 2 lb 10 oz

■ TRANSMITTER

• Output power :

Version	High	Middle	Low
except TPE, THA	55 W	10 W	5 W
TPE	25 W	—	5 W
THA	10 W	—	5 W

• Modulation system : Variable reactance frequency
• Maximum frequency deviation : ±5.0/±2.5* kHz *Europe and Italy versions only
• Spurious emissions : Less than –60 (–55*) dB *Thailand version only
• Microphone connector : 8-pin modular (600 Ω)

■ RECEIVER

• Receive system : Double-conversion superheterodyne
• Intermediate frequency : 1st 15.65 MHz
2nd 450 kHz
• Sensitivity (at 12 dB SINAD) : Loss than 0.18 μV
• Squelch sensitivity (threshold) : Less than 0.13 μV
• Selectivity (wide/narrow) : More than 12/6* kHz at –6 dB
Less than 28/18* kHz at –60 dB
*Europe and Italy versions only
• Spurious and image rejection : More than 60 dB
• Intermodulation rejection retio : More than 70 dB
• Audio output power (at 13.8 V) : More than 2.4 W at 10% distortion with an 8Ω load
• External speaker connector : 3-conductor 3.5(d) mm (⅛")/8 Ω

All stated specifications are subject to change without notice or obligation.

SECTION 2 INSIDE VIEWS

• MAIN UNIT

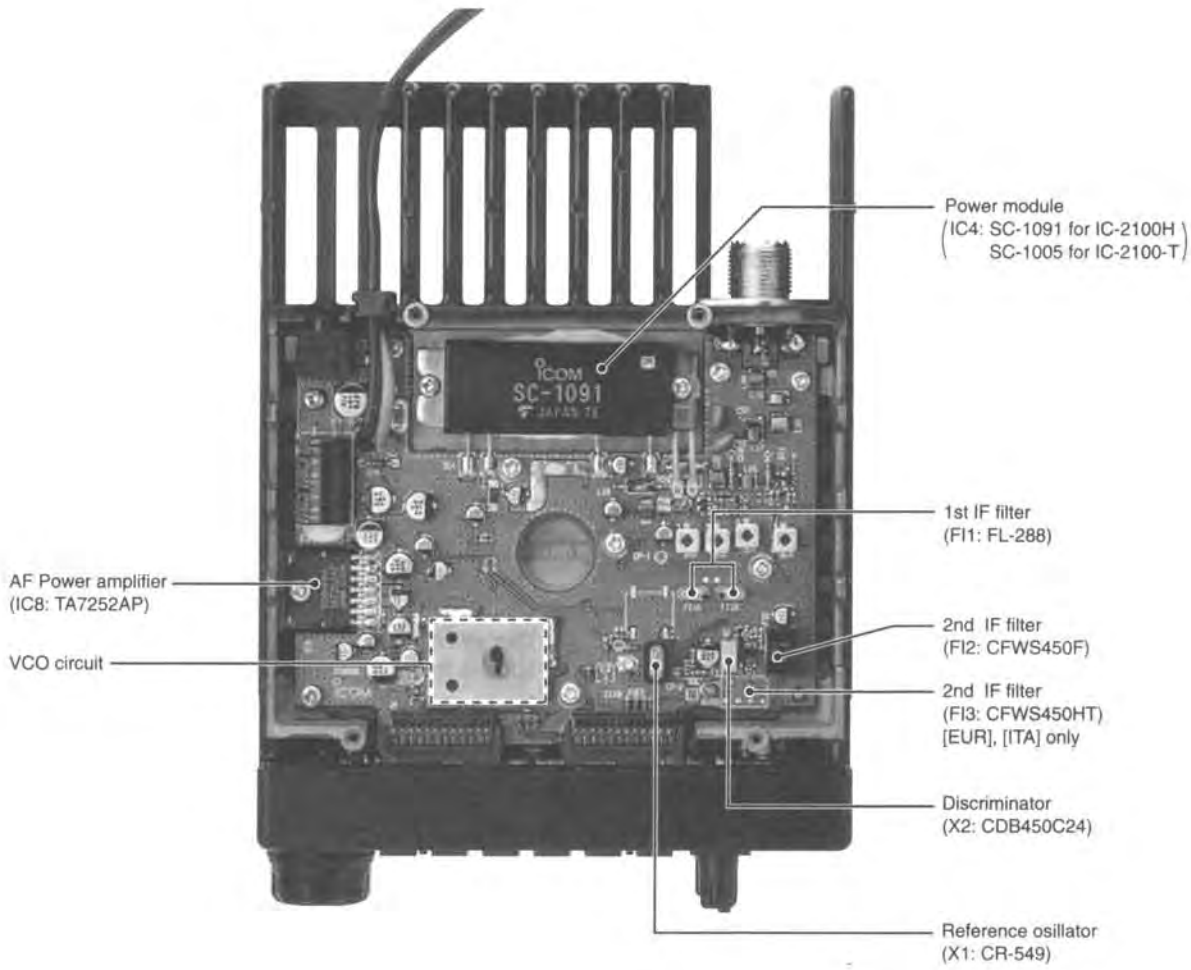

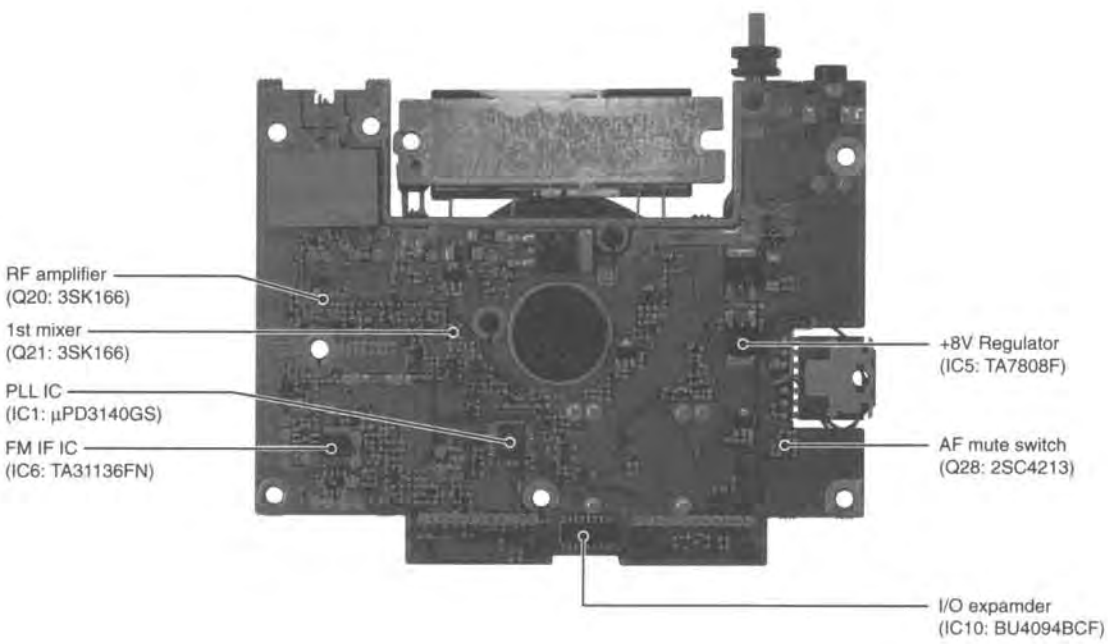

SECTION 3 CIRCUIT DESCRIPTION

3-1 RECEIVER CIRCUITS

3-1-1 ANTENNA SWITCHING CIRCUIT (MAIN unit)

The antenna switching circuit functions as a low-pass filter while receiving and a resonator circuit while transmitting. The circuit does not allow transmit signals to enter receiver circuits.

Received signals enter the antenna connector and pass through the low-pass filter (L17–L20, C55–C64). The filtered signals are passed through the λ/4 type antenna switching circuit (D10, D11, L22, L23) and are then applied to the RF amplifier (Q20).

3-1-2 SQUELCH ATTENUATOR

The attenuator circuit attenuates the signal strength to a maximum of 10 dB to protect the RF amplifier from distortion when excessively strong signals are received.

The current flow of the antenna switching circuit (D10, D11) is controlled by the [SQL] control via the attenuator controller (IC7). When the [SQL] control is rotated clockwise deeper than 12 o'clock, the current of D10 and D11 is increased. In this case, D10 and D11 act as an attenuator.

3-1-3 RF CIRCUIT (MAIN unit)

The RF circuit amplifies signals within the range of frequency coverage and filters out-of-band signals.

The signals from the antenna switching circuit pass through the tunable bandpass filter (D13). The filtered signals are amplified at the RF amplifier (Q20) and then enter another three-stage bandpass filters (D14–D16) to suppress unwanted signals. The filtered signals are applied to the 1st mixer circuit (Q21).

The tunable bandpass filters (D13–D16) employ varactor diodes to tune the center frequency of the RF passband for wide bandwidth receiving and good image response rejection. These diodes are controlled by the PLL lock voltage via the tune control circuit (IC2, D4).

3-1-4 1ST MIXER AND 1ST IF CIRCUITS (MAIN unit)

The 1st mixer circuit converts the received signals to a fixed frequency of the 1st IF signal with the PLL output frequency. By changing the PLL frequency, only the desired frequency will pass through a pair of crystal filters at the next stage of the 1st mixer.

The RF signals from the bandpass filter are applied to the 1st mixer circuit (Q21). The applied signals are mixed with the 1st LO signal coming from the RX-VCO circuit (Q33, D23) to produce a 15.65 MHz 1st IF signal. The 1st IF signal passes through a pair of crystal filters (FI1a/b) to suppress out-of-band signals. The filtered signal is amplified at the 1st IF amplifier (Q22) and applied to the 2nd IF circuit.

3-1-5 2ND IF AND DEMODULATOR CIRCUITS (MAIN unit)

The 2nd mixer circuit converts the 1st IF signal to a 2nd IF signal. A double-conversion superheterodyne system improves the image rejection ratio and obtains stable receiver gain.

The 1st IF signal from the IF amplifier (Q22) is applied to the 2nd mixer section of the FM IF IC (IC6, pin 16) and is then mixed with the 2nd LO signal for conversion to a 450 kHz 2nd IF signal.

IC6 contains the 2nd mixer, limiter amplifier, quadrature detector, S-meter detector, active filter and noise amplifier circuits, etc. A frequency from the PLL reference oscillator is used for the 2nd LO signal (15.2 MHz).

The 2nd IF signal from the 2nd mixer (IC6, pin 3) passes through the ceramic filter (FI2) (during wide channel spacing selection or passes through FI3 during narrow channel spacing selection; [EUR], [ITA] only). It is then amplified at the limiter amplifier section (IC6, pin 5) and applied to the quadrature detector section (IC6, pins 10, 11 and X2) to demodulate the 2nd IF signal into AF signals.

The AF signals are output from pin 9 (IC6) and are then applied to the AF amplifier circuit.

•2nd IF AND DEMODULATOR CIRCUITS

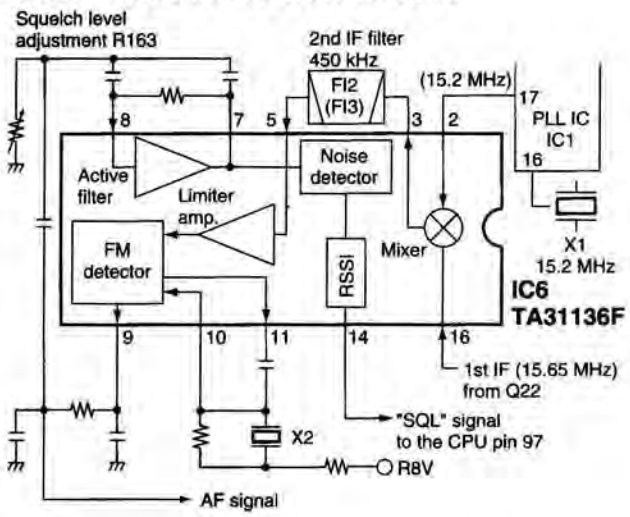

3-1-6 AF CIRCUIT (MAIN unit)

The AF amplifier circuit amplifies the demodulated AF signals to drive a speaker.

The AF signals from IC6 (pin 9) are amplified at the active filters (Q23 HPF, Q24 LPF) and pass through the detector mute switch (Q25), and are level adjusted with the volume control on the LOGIC unit.

The AF amplifier IC8 amplifies the signals to a sufficient level to drive the speaker. The AF mute switch (Q28) turns ON to cut the signal to be input to the AF amplifier (IC8) during transmission.

3-1-7 SQUELCH CIRCUIT (MAIN and LOGIC units)

• NOISE SQUELCH

The noise squelch circuit cuts out AF signals when no RF signals are received. By detecting noise components in the AF signals, the squelch circuit switches the AF mute switch.

A portion of the AF signals from the FM IF IC (IC6, pin 9) are applied to the active filter section (IC6, pin 8). The active filter section amplifies and filters noise components. The filtered signals are applied to the noise detector section and output from pin 14 as the "SQL" signal.

The "SQL" signal from IC6 (pin14) is applied to the CPU (LOGIC unit; IC1, pin 98). The CPU analyzes the noise condition and outputs the "RMUT" and "AMUT" signals via the I/O expander IC (LOGIC unit; IC10) to toggle the detector (Q25) and AF (Q28) mute switches.

Even when the squelch is closed, the AF mute switch (Q28) opens at the moment of emitting beep tones.

• TONE SQUELCH

The tone squelch circuit detects AF signals and opens the squelch only when receiving a signal containing a matching subaudible tone (CTCSS). When tone squelch is in use, and a signal with a mismatched or no subaudible tone is received, the tone squelch circuit mutes the AF signals even when noise squelch is open.

A portion of the AF signals from the FM IF IC (IC6, pin 9) passes through the low-pass filter (LOGIC unit; IC6) to remove AF (voice) signals and is applied to the CTCSS decoder inside the CPU (LOGIC unit; IC1, pin 1) via the "TONEIN" line to control the DET and AF mute switches.

3-2 TRANSMITTER CIRCUIT

3-2-1 MICROPHONE AMPLIFIED (LOGIC unit)

The microphone amplifier circuit amplifies audio signals with +6 dB/octave pre-emphasis characteristics from the microphone to a level needed for the modulation circuit.

The AF signals from the microphone are adjusted for impedance-matching at the MIC sensitivity control circuit (IC4, D4). The adjusted signals pass through the MIC mute switch (Q4), and are then amplified at the microphone amplifier (Q5) and the limiter amplifier (IC5a) which has a negative feedback circuit for +6 dB/octave pre-emphasis.

The amplified signals are applied to the low-pass filter (IC5b) to filter out RF components and are then applied to the MAIN unit as the "MOD" signal.

3-2-2 MODULATION CIRCUIT (MAIN unit)

The modulation circuit modulates the VCO oscillating signal (RF signal) using the microphone audio signals.

The audio signals (MOD) change the reactance of D1 to modulate the oscillated signal at the TX-VCO circuit (Q1, Q2). The modulated signal is amplified at the buffer amplifier (Q4) and LO amplifier (Q5), then applied to the drive amplifiers.

3-2-3 DRIVE AMPLIFIER CIRCUIT (MAIN unit)

The drive amplifier circuit amplifies the VCO oscillating signal to the level needed at the power amplifier.

The RF signal from the LO amplifier (Q5) passes through the T/R switch (D5) and is amplified at the pre-drive (Q13) and drive (Q14) amplifiers. The amplified signal is applied to the power amplifier circuit.

3-2-4 POWER AMPLIFIER CIRCUIT (MAIN unit)

The power amplifier circuit amplifies the driver signal to an output power level.

The RF signal from the drive amplifier (Q14) is applied to the power module (IC4) to obtain 55 W (25 W for Taiwan version, 10 W for the IC-2100-T Thailand version) of RF power.

The amplified signals is passed through the antenna switching circuit (D7), APC detector circuit (L18, D8, D9), and low-pass filter (L19, L20, C62–C64) and is then applied to the antenna connector.

Collector voltages for the driver (Q13) and control voltage for the power amplifier (IC4, pin 2) are controlled by the APC circuit to protect the power module from a mismatched condition as well as to stabilize the output power.

3-2-5 APC CIRCUIT (MAIN unit)

The APC circuit protects the power amplifier from a mismatched output load and stabilizes the output power.

The APC detector circuit (L10, D8, D9) detects forward signals and reflection signals at D8 and D9 respectively. The combined voltage is at minimum level when the antenna impedance is matched at 50 Ω and is increased when it is mismatched.

The detected voltage is applied to the differential amplifier (IC3, pin 3), and the power setting voltage is applied to the other input (pin 1) for the reference.

When antenna impedance is mismatched, the detected voltage exceeds the power setting voltage. The output voltage of the differential amplifier (IC3, pin 4) controls the input current of the power module (IC4) and drive amplifier (Q14) to reduce the output power via the APC controller (Q18, Q19).

• APC circuit

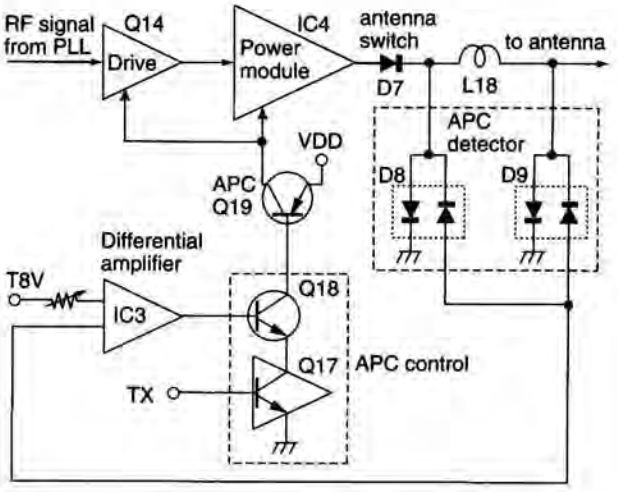

3-3 PLL CIRCUITS

3-3-1 PLL CIRCUIT

A PLL circuit provides stable oscillation of the transmit frequency and the receive 1st LO frequency. The PLL circuit compares the phase of the divided VCO frequency to the reference frequency. The PLL output frequency is controlled by the divided ratio (N-data) of a programmable divider.

An oscillated signal from the VCO passes thorough the buffer amplifiers (Q4, Q6) is applied to the PLL IC (IC1, pin 2) and is prescaled in the PLL IC based on the divided ratio (N-data). The reference signal is generated at the reference oscillator (X1) and is also applied to the PLL IC. The PLL IC detects the out-of-step phase using the reference frequency and outputs it from pin 8. The output signal is passed thorough the loop filter (R89, R90, C105, C107) and is then applied to the VCO circuit as the lock voltage.

The lock voltage is also used for the receiver tunable bandpass filters to match the filter's center frequency to the desired receive frequency. The lock voltage is applied to the bandpass filters (D13–D16) via the tune control circuit (IC4, D4).

3-3-2 VCO CIRCUIT (MAIN unit)

The VCO circuit contains a separate TX-VCO (Q1, Q2, D1) and RX-VCO (Q33, D23). The oscillated signal is amplified at the buffer (Q4) and LO (Q5) amplifiers, and is then applied to the T/R switching circuit (D5). Then the Tx and Rx signals are applied to the pre-driver (Q13) and 1st mixer (Q21) respectively.

A portion of the signal from Q4 is amplified at the buffer amplifier (Q6) and is then fed back to the PLL IC (IC1 pin 2) as the comparison signal.

3-4 POWER SUPPLY CIRCUITS

VOLTAGE LINES

Line	Description
HV	The voltage from the connected DC power supply.
13.8V	The same voltage as the HV line which is controlled by the power switching circuit (Q25, Q26, Q35). When the [POWER] switch is pushed, the CPU outputs the "PWRON" control signal to the power switching circuit to turn the circuit ON.
C5V	Common 5 V for the CPU converted from the HV line by the C5V regulator circuit (IC9). The circuit outputs the voltage regardless of the power ON/OFF condition.
+8V	Common 8 V converted from the 13.8V line by the +8V regulator circuit (IC5).
R8V	Receive 8 V controlled by the R8V regulator circuit (Q29, Q30) using the "RX" signal from the I/O expander IC (IC10).
T8V	Transmit 8 V controlled by the T8V regulator circuit (Q11, Q12) using the "TX" signal from the I/O expander IC (IC10).
+5V	Common 5 V converted from the +8V line by the +5V regulator circuit (Q31, Q32).

• **PLL circuit**

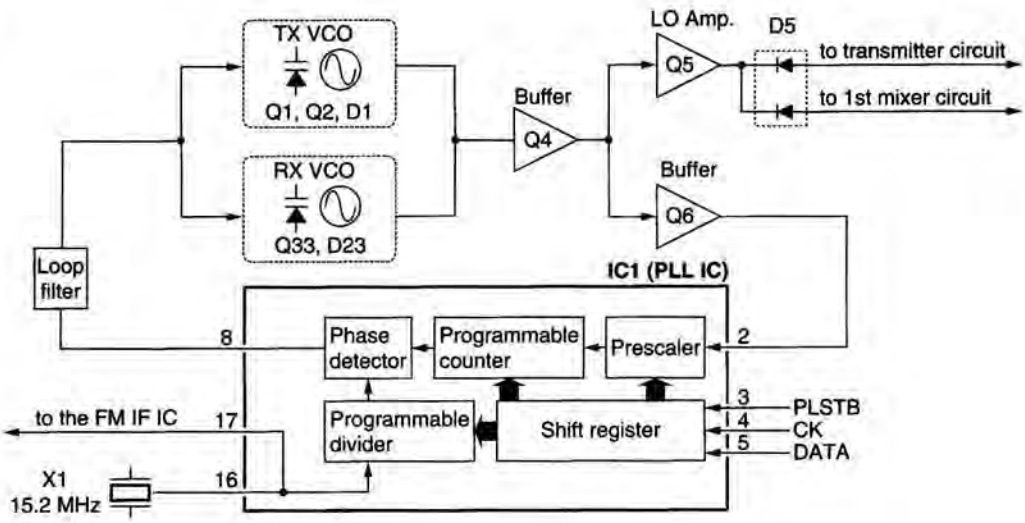

3-5 PORT ALLOCATIONS

3-5-1 CPU (LOGIC UNIT IC1)

Pin number	Port name	Description
1	TONEIN	nput port for the CTCSS decode signals.
9	$\overline{RES}$	Input port for the reset signal.
11	CK	Outputs clock signal to the I/O expander ICs (IC10, MAIN unit; IC10), PLL IC (MAIN unit; IC1), etc.
12	DATA	Outputs data signals to the I/O expander ICs (IC10, MAIN unit; IC10), PLL IC (MAIN unit; IC1), etc.
13	ESCK	Outputs clock signal to the EEPROM (IC7).
14	ESDA	I/O port for the EEPROM (IC7) data signals.
16	RD	Input port for the cloning signal.
17	TD	Output port for the cloning signal.
18	PWRSW	Input for the POWER switch. Low : While POWER switch is pushed.
19, 20	DLCK, DLUD	Input ports for up/down signals from main dial.
22	EXSTB	Outputs strobe signals for the I/O expander ICs (IC10, MAIN unit; IC10).
23	MICIN	Input port for microphone serial signal via the buffer amplifier.
24	PLSTB	Outputs strobe signals for the PLL IC (MAIN unit; IC1).
25	E-TONE	Outputs 1750 Hz Europe tone signal.
26	UNLK	Input port for PLL unlock signal from the PLL IC (MAIN unit; IC1). High : During unlock
33–35	COM3–COM1	Output LCD drive signals.
36–39	KR0–KR3	Input ports for initial matrix.
40	PWRON	Outputs power switching circuit control signal. High : While turning power ON.
41	COLOR	Outputs color control signal for display backlight. High : While display backlight is amber.
42, 43	DIM0, DIM1	Outputs brightness control signal for display backlight.
44–75	SEG9–SEG40	Output LCD drive signals.
77–88	SEG41–SEG52	
90	CTCSS	Outputs CTCSS signals.
91	DTMF	Outputs DTMF signals.
93	PTT	Input port for the PTT switch. High : While PTT switch is pushed.
94	EXTMIC	Input port to detect remote microphon connection. Low : HM-90/98 is connected.
96	SQLV	Input port for squelch setting level signal.
97	SQL	Input port for squelch level signal.
99	SMET	Input port S-meter level signal.
100	MICUD	Input ports for up/down signals from a microphone.

3-5-2 I/O expander IC

(1) IC10 (LOGIC unit)

Pin number	Port name	Description
11	W/N	Outputs receive/transmit passband width control signal. High : While narrow bandwidth is selected. ([EUR], [ITA] only)
12	MMUTE	Outputs MIC mute control signal. High : While DTMF signals are output, etc.
13	AMUTE	Outputs AF mute switch (MAIN unit; Q28) control signal. High : While squelched.
14	RMUTE	Outputs detector mute switch (MAIN unit; Q25) control signal. High : While squelched.

(2) IC10 (MAIN unit)

Pin number	Port name	Description
4	TX	Outputs the T8V regulator (Q11, Q12) control signal. Low : While transmitting
5, 6	LP1, LP2	Output RF power control signals. RF power: High / Mid / Low LP1: L / L / H LP2: L / H / L
7	SHIFT	Outputs TX-VCO/RX-VCO select signal. High : While transmitting
14	RX	Outputs the R8V regulator (Q29, Q30) control signal. Low : While receiving

SECTION 4 ADJUSTMENT PROCEDURES

4-1 PREPARATION

All adjustments in this section must be performed on wide bandwidth condition unless specified otherwise.
(Narrow bandwidth is selectable for Europe and Italy vertions only.)

■REQUIRED TEST EQUIPMENT

EQUIPMENT	GRADE AND RANGE	EQUIPMENT	GRADE AND RANGE
DC power supply	Output voltage : 13.8 V DC Current capacity : 20 A or more	Audio generator	Frequency range : 300–3000 Hz Measuring range : 1–500 mV
RF power meter (terminated type)	Measuring range : 1–80 W Frequency range : 100–300 MHz Impedance : 50 Ω SWR : Less than 1.2 : 1	Standard signal generator (SSG)	Frequency range : 0.1–300 MHz Output level : 0.1 μV–32 mV (–127 to –17 dBm)
Frequency counter	Frequency range : 0.1–300 MHz Frequency accuracy : ±1 ppm or better Sensitivity : 100 mV or better	Oscilloscope	Frequency range : DC–20 MHz Measuring range : 0.01–20 V
		AC millivoltmeter	Measuring range : 10 mV–10 V
FM deviation meter	Frequency range : 30–300 MHz Measuring range : 0 to ±10 kHz	External speaker	Input impedance : 8 Ω Capacity : 4 W or more
DC voltmeter	Input impedance : 50 kΩ/V DC or better	Attenuator	Power attenuation : 50 or 60 dB Capacity : 100 W or more

■CONNECTION

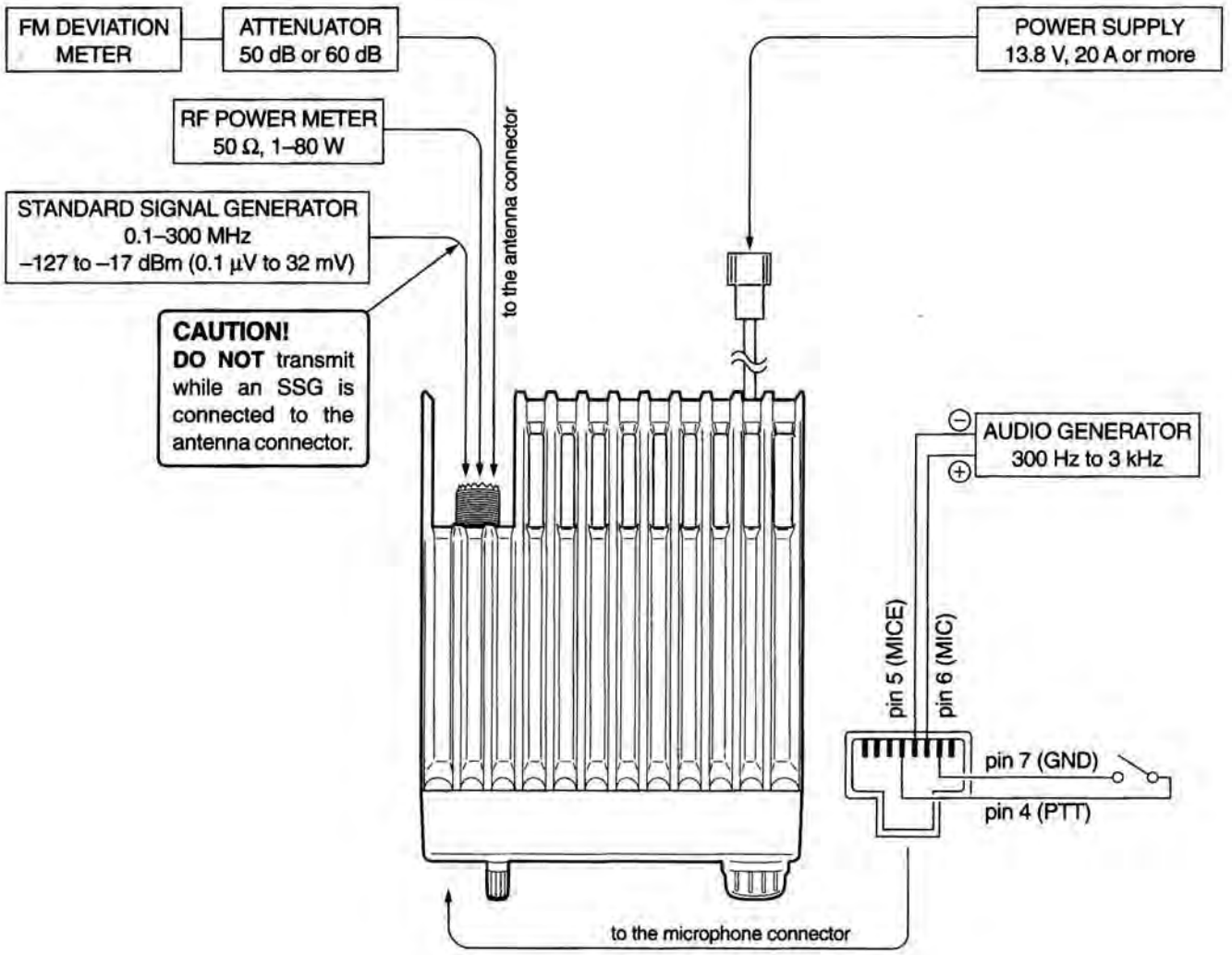

4-2 PLL ADJUSTMENTS

ADJUSTMENT		ADJUSTMENT CONDITION	MEASUREMENT		VALUE	ADJUSTMENT POINT	
			UNIT	LOCATION		UNIT	ADJUST
PLL LOCK VOLTAGE	1	• Displayed frequency : 145.000 MHz • Receiving	MAIN	Connect a digital multi-meter or oscilloscope to the check point CP1.	1.25–1.30 V	MAIN	L35
	2	• Transmitting			1.45–1.55 V		L2
PLL REFERENCE FREQUENCY	1	• Displayed frequency : 145.000 MHz [EUR, TPE, THA] 146.000 MHz [ITA, USA, SEA, LA] • Output power : Low • Transmitting	Rear Panel	Loosely couple the frequency counter to the antenna connector.	145.00000 MHz [EUR, TPE, THA] 146.00000 MHz [ITA, USA, SEA, LA]	MAIN	C119

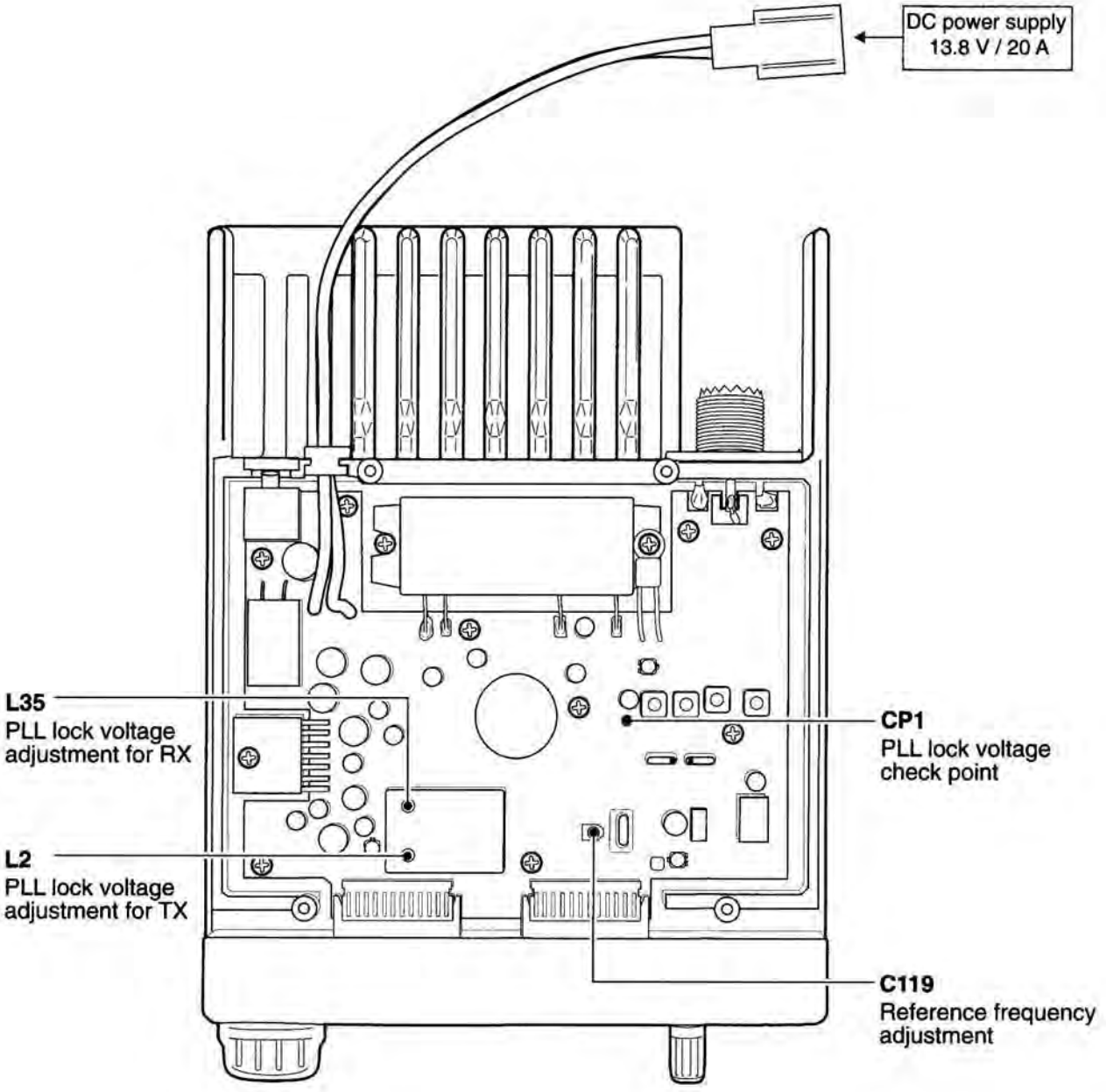

4-3 TRANSMITTER AND RECEIVER ADJUSTMENTS

The receiver adjustments must be performed after PLL ADJUSTMENTS.

ADJUSTMENT		ADJUSTMENT CONDITION	MEASUREMENT		VALUE	ADJUSTMENT POINT	
			UNIT	LOCATION		UNIT	ADJUST
OUTPUT POWER	1	• Displayed frequency : 145.000 MHz [EUR, TPE, THA] 146.000 MHz [ITA, USA, SEA, LA] • Output power : High • Transmitting	Rear Panel	Connect the RF power meter to the antenna connector.	10 W [THA] 25 W [TPE] 55 W [other]	MAIN	R49
FM DEVIATION	1	• Displayed frequency : 145.000 MHz [EUR, TPE, THA] 146.000 MHz [ITA, USA, SEA, LA] • Output power : Low • Connect an audio generator to the [MIC] connector and set as: 1 kHz/ 50 mV [USA] 1 kHz/ 20 mV [other] • TONE : OFF • Set an FM deviation meter as: HPF : 50 Hz LPF : 20 kHz De-emphasis : OFF Detector : (P–P)/2 • Transmitting	Rear Panel	Connect an FM deviation meter to the antenna connector through an attenuator.	±4.8 kHz	MAIN	R86
	2	• IF bandwidth : Narrow [EUR, ITA] only • Transmitting			±2.0–±3.0 kHz		Verify
SENSITIVITY	1	• Displayed frequency : 145.000 MHz [EUR, TPE, THA] 146.000 MHz [ITA, USA, SEA, LA] • Connect an SSG to the antenna connector and set as: Level : 32 µV* (–77 dBm) Deviation : ±3.5 kHz Modulation : 1 kHz • Receiving	MAIN	Connect a digital multimeter or oscilloscope to check point CP2.	Maximum voltage	MAIN	Adjust in sequence repeatedly. L24, L26, L28, L29
SQUELCH/ S-METER (SQUELCH)	1	• Turn into squelch/S-meter setting mode. Connect a JIG to the [MIC] connector, then turn power ON. • Displayed frequency : 145.000 MHz [EUR, TPE, THA] 146.000 MHz [ITA, USA, SEA, LA] • R163 : Max. clockwise • Connect an SSG to the antenna connector and set as: Level : 0.071 µV* (–130 dBm) Deviation : ±3.5 kHz Modulation : 1 kHz • Receiving	Speaker		At the point where the signal just appears.	MAIN	R163
(S-METER)	2	• Set an SSG as : Level : 1.0 µV* (–107 dBm) Deviation : ±3.5 kHz Modulation : 1 kHz • Receiving	Display	S/RF indicator	Push and hold the [S.MW] key, or push the [MW] key on the HM-98. • Verify that S-meter shows S3 (4 dots).		

*This output level of the standard signal generator (SSG) is indicated as SSG's open circuit.

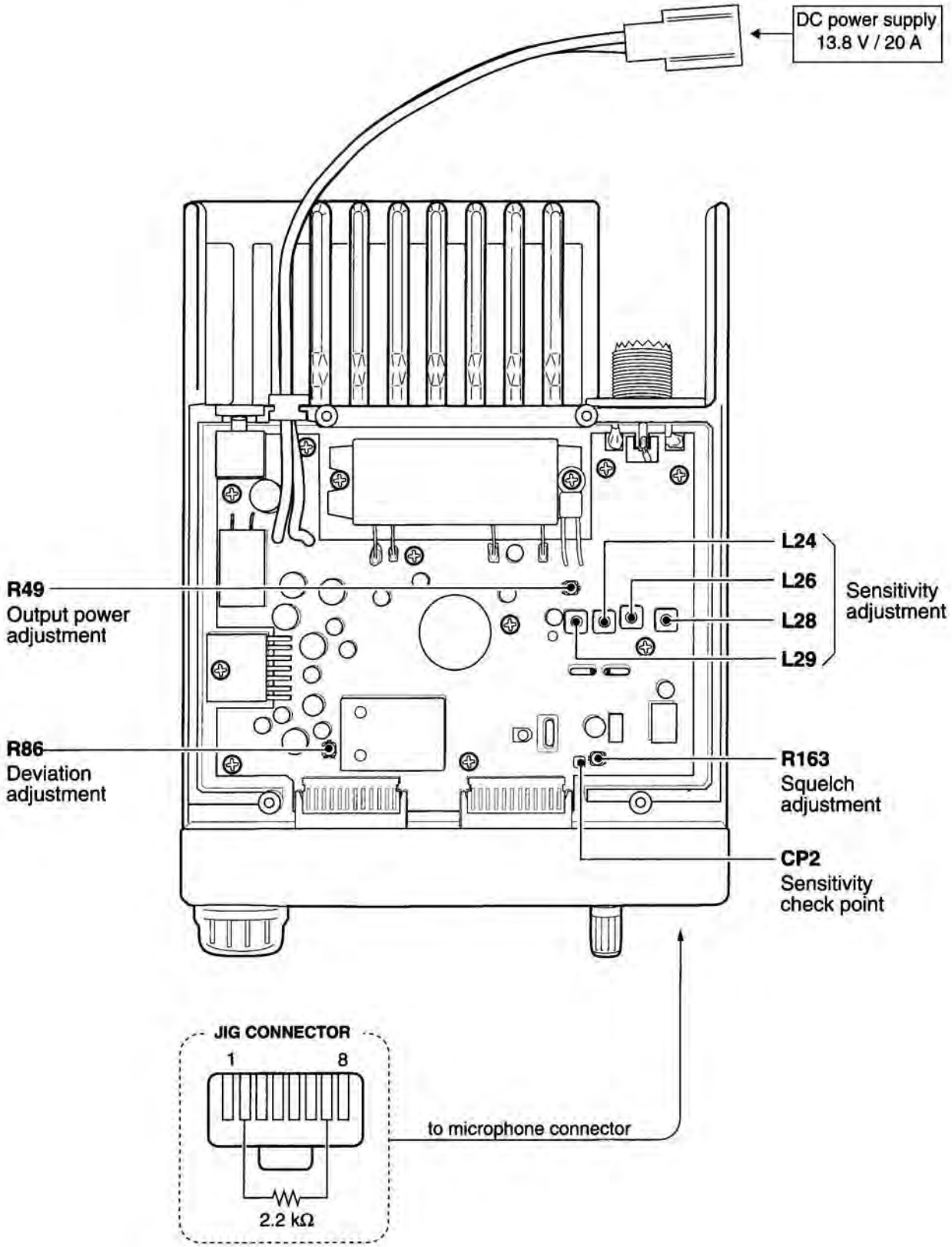
DC power supply
13.8 V / 20 A
R49
Output power adjustment
R86
Deviation adjustment
L24
L26
L28
L29
Sensitivity adjustment
R163
Squelch adjustment
CP2
Sensitivity check point
JIG CONNECTOR
1
8
2.2 kΩ
to microphone connector

SECTION 5 PARTS LIST

[LOGIC UNIT]

REF NO.	ORDER NO.	DESCRIPTION	
IC1	1140007020	S.IC	HD6433875A83H [THA] only
	1140007420	S.IC	HD6433875A85H other
IC2	1110002860	S.IC	TA75S393F (TE85R)
IC4	1130004200	S.IC	TC4S66F (TE85R)
IC5	1110000960	S.IC	NJM4558M(T1)
IC6	1110000960	S.IC	NJM4558M(T1)
IC7	1130007290	S.IC	24LC16BT-I/SN
IC8	1110004750	S.IC	S-80945ALMP-DA9-T2
IC10	1130007700	S.IC	BU4094BCF-T1
Q1	1530002060	S.TRANSISTOR	2SC4081 T107 R
Q2	1590001330	S.TRANSISTOR	DTA114EUA T106
Q3	1540000250	S.TRANSISTOR	2SD999-T2 CK
Q4	1590001390	S.FET	2SJ144-Y (TE85R)
Q5	1530002060	S.TRANSISTOR	2SC4081 T107 R
Q6	1530002060	S.TRANSISTOR	2SC4081 T107 R
Q7	1590001390	S.FET	2SJ144-Y (TE85R)
Q8	1590000430	S.TRANSISTOR	DTC144EUA T106
Q11	1590000660	S.TRANSISTOR	DTC144TU T107
Q18	1590000430	S.TRANSISTOR	DTC144EUA T106
Q20	1530002850	S.TRANSISTOR	2SC4116-BL(TE85R) [EUR], [ITA] only
Q21	1530002060	S.TRANSISTOR	2SC4081 T107 R
Q22	1530002060	S.TRANSISTOR	2SC4081 T107 R
Q23	1530002060	S.TRANSISTOR	2SC4081 T107 R
Q24	1530002060	S.TRANSISTOR	2SC4081 T107 R
Q25	1530002060	S.TRANSISTOR	2SC4081 T107 R
Q26	1590000430	S.TRANSISTOR	DTC144EUA T106
Q27	1510000510	S.TRANSISTOR	2SA1576 AT106 R
Q28	1590000430	S.TRANSISTOR	DTC144EUA T106
D1	1730002280	S.ZENER	MA8091-M (TX)
D2	1730002280	S.ZENER	MA8091-M (TX)
D3	1750000550	S.DIODE	1SS355 TE-17
D4	1750000550	S.DIODE	1SS355 TE-17
D5	1750000550	S.DIODE	1SS355 TE-17
D6	1730002280	S.ZENER	MA8091-M (TX)
D7	1750000550	S.DIODE	1SS355 TE-17
D9	1750000130	S.DIODE	DA204U T107
D12	1160000060	S.DIODE	DAN202U T107
D13	1160000060	S.DIODE	DAN202U T107
D14	1160000060	S.DIODE	DAN202U T107
D15	1750000550	S.DIODE	1SS355 TE-17
D16	1710000600	DIODE	1SS254 [EUR], [TPE]
D18	1750000550	S.DIODE	1SS355 TE-17 [EUR], [TPE], [USA]
D19	1750000550	S.DIODE	1SS355 TE-17 [THA]
D21	1160000060	S.DIODE	DAN202U T107 [EUR]
	1750000170	S.DIODE	DA115 T107 [TPE], [THA]
	1750000160	S.DIODE	DA114 T107 [SEA]
D22	1750000170	S.DIODE	DA115 T107 [ITA]
	1750000160	S.DIODE	DA114 T107 [TPE]
D23	1160000060	S.DIODE	DAN202U T107
D24	1750000550	S.DIODE	1SS355 TE-17
D25	1750000550	S.DIODE	1SS355 TE-17
X1	6050009600	S.XTAL	SMD-49 (8.000 MHz)
L1	6200005950	S.COIL	LQH 3N 2R2M04 (Q20)
L2	6200004920	S.COIL	MLF1608A 2R2K-T
L3	6200004920	S.COIL	MLF1608A 2R2K-T
L4	6200004920	S.COIL	MLF1608A 2R2K-T
L5	6200005950	S.COIL	LQH 3N 2R2M04 (Q20)
L6	6200004920	S.COIL	MLF1608A 2R2K-T
L7	6200001520	S.COIL	MLF2012D R82K-T
L8	6200004920	S.COIL	MLF1608A 2R2K-T
R1	7030003600	S.RESISTOR	ERJ3GEYJ 223 V (22 kΩ)
R2	7030003560	S.RESISTOR	ERJ3GEYJ 103 V (10 kΩ)
R3	7030003480	S.RESISTOR	ERJ3GEYJ 222 V (2.2 kΩ)

[LOGIC UNIT]

REF NO.	ORDER NO.	DESCRIPTION	
R4	7030003680	S.RESISTOR	ERJ3GEYJ 104 V (100 kΩ)
R5	7030003390	S.RESISTOR	ERJ3GEYJ 391 V (390 Ω)
R6	7030001040	S.RESISTOR	MCR50JZHJ 18 Ω (180)
R7	7030000020	S.RESISTOR	MCR10EZHJ 1 Ω (010)
R8	7030003690	S.RESISTOR	ERJ3GEYJ 124 V (120 kΩ)
R9	7030003520	S.RESISTOR	ERJ3GEYJ 472 V (4.7 kΩ)
R10	7030003750	S.RESISTOR	ERJ3GEYJ 394 V (390 kΩ)
R11	7030003560	S.RESISTOR	ERJ3GEYJ 103 V (10 kΩ)
R12	7030003680	S.RESISTOR	ERJ3GEYJ 104 V (100 kΩ)
R13	7030003680	S.RESISTOR	ERJ3GEYJ 104 V (100 kΩ)
R14	7030003450	S.RESISTOR	ERJ3GEYJ 122 V (1.2 kΩ)
R15	7030003320	S.RESISTOR	ERJ3GEYJ 101 V (100 Ω)
R16	7030003560	S.RESISTOR	ERJ3GEYJ 103 V (10 kΩ)
R17	7030003600	S.RESISTOR	ERJ3GEYJ 223 V (22 kΩ) [USA] only
	7030003510	S.RESISTOR	ERJ3GEYJ 392 V (3.9 kΩ) other
R18	7030003510	S.RESISTOR	ERJ3GEYJ 392 V (3.9 kΩ)
R19	7030003560	S.RESISTOR	ERJ3GEYJ 103 V (10 kΩ)
R20	7030003530	S.RESISTOR	ERJ3GEYJ 562 V (5.6 kΩ) [TPE], [USA] only
R21	7030003680	S.RESISTOR	ERJ3GEYJ 104 V (100 kΩ)
R22	7030003680	S.RESISTOR	ERJ3GEYJ 104 V (100 kΩ)
R23	7030003600	S.RESISTOR	ERJ3GEYJ 223 V (22 kΩ)
R24	7030003280	S.RESISTOR	ERJ3GEYJ 470 V (47 Ω)
R25	7030003420	S.RESISTOR	ERJ3GEYJ 681 V (680 Ω)
R26	7030003320	S.RESISTOR	ERJ3GEYJ 101 V (100 Ω)
R27	7030003380	S.RESISTOR	ERJ3GEYJ 331 V (330 Ω)
R28	7030003760	S.RESISTOR	ERJ3GEYJ 474 V (470 kΩ)
R29	7030003680	S.RESISTOR	ERJ3GEYJ 104 V (100 kΩ)
R30	7030003640	S.RESISTOR	ERJ3GEYJ 473 V (47 kΩ)
R31	7030003730	S.RESISTOR	ERJ3GEYJ 274 V (270 kΩ)
R32	7030003480	S.RESISTOR	ERJ3GEYJ 222 V (2.2 kΩ)
R33	7030003800	S.RESISTOR	ERJ3GEYJ 105 V (1 MΩ)
R34	7030003560	S.RESISTOR	ERJ3GEYJ 103 V (10 kΩ)
R35	7030003560	S.RESISTOR	ERJ3GEYJ 103 V (10 kΩ)
R36	7030003700	S.RESISTOR	ERJ3GEYJ 154 V (150 kΩ)
R37	7030003390	S.RESISTOR	ERJ3GEYJ 391 V (390 Ω)
R38	7030003790	S.RESISTOR	ERJ3GEYJ 824 V (820 kΩ)
R39	7030003750	S.RESISTOR	ERJ3GEYJ 394 V (390 kΩ)
R40	7030003790	S.RESISTOR	ERJ3GEYJ 824 V (820 kΩ)
R41	7030003590	S.RESISTOR	ERJ3GEYJ 183 V (18 kΩ)
R42	7030003560	S.RESISTOR	ERJ3GEYJ 103 V (10 kΩ)
R43	7030003570	S.RESISTOR	ERJ3GEYJ 123 V (12 kΩ)
R44	7030003630	S.RESISTOR	ERJ3GEYJ 393 V (39 kΩ)
R45	7030003520	S.RESISTOR	ERJ3GEYJ 472 V (4.7 kΩ)
R46	7030003720	S.RESISTOR	ERJ3GEYJ 224 V (220 kΩ)
R47	7030003670	S.RESISTOR	ERJ3GEYJ 823 V (82 kΩ)
R48	7030003670	S.RESISTOR	ERJ3GEYJ 823 V (82 kΩ)
R49	7030003670	S.RESISTOR	ERJ3GEYJ 823 V (82 kΩ)
R50	7030003560	S.RESISTOR	ERJ3GEYJ 103 V (10 kΩ)
R51	7030003760	S.RESISTOR	ERJ3GEYJ 474 V (470 kΩ)
R52	7030003800	S.RESISTOR	ERJ3GEYJ 105 V (1 MΩ)
R53	7030003670	S.RESISTOR	ERJ3GEYJ 823 V (82 kΩ)
R54	7030003670	S.RESISTOR	ERJ3GEYJ 823 V (82 kΩ)
R55	7030003670	S.RESISTOR	ERJ3GEYJ 823 V (82 kΩ)
R56	7030003690	S.RESISTOR	ERJ3GEYJ 124 V (120 kΩ)
R57	7030003760	S.RESISTOR	ERJ3GEYJ 474 V (470 kΩ)
R58	7030003680	S.RESISTOR	ERJ3GEYJ 104 V (100 kΩ)
R59	7030003800	S.RESISTOR	ERJ3GEYJ 105 V (1 MΩ)
R60	7030003760	S.RESISTOR	ERJ3GEYJ 474 V (470 kΩ)
R61	7210001870	VARIABLE	EVU-F2AF20 A14 (10KA)
R62	7210001860	VARIABLE	EVU-F2AF20 B14 (10KB)
R64	7030003520	S.RESISTOR	ERJ3GEYJ 472 V (4.7 kΩ)
R65	7030003640	S.RESISTOR	ERJ3GEYJ 473 V (47 kΩ)
R66	7030003440	S.RESISTOR	ERJ3GEYJ 102 V (1 kΩ)
R67	7030003440	S.RESISTOR	ERJ3GEYJ 102 V (1 kΩ)
R68	7030003440	S.RESISTOR	ERJ3GEYJ 102 V (1 kΩ)
R69	7030003440	S.RESISTOR	ERJ3GEYJ 102 V (1 kΩ)
R70	7030003440	S.RESISTOR	ERJ3GEYJ 102 V (1 kΩ)
R71	7030003440	S.RESISTOR	ERJ3GEYJ 102 V (1 kΩ)
R73	7030003440	S.RESISTOR	ERJ3GEYJ 102 V (1 kΩ)
R74	7030003800	S.RESISTOR	ERJ3GEYJ 105 V (1 MΩ)
R75	7030003440	S.RESISTOR	ERJ3GEYJ 102 V (1 kΩ)
R76	7030003440	S.RESISTOR	ERJ3GEYJ 102 V (1 kΩ)
R77	7030003440	S.RESISTOR	ERJ3GEYJ 102 V (1 kΩ)
R78	7030003440	S.RESISTOR	ERJ3GEYJ 102 V (1 kΩ)

S.=Surface mount

[LOGIC UNIT]

REF NO.	ORDER NO.	DESCRIPTION	
R79	7030003440	S.RESISTOR	ERJ3GEYJ 102 V (1 kΩ)
R80	7030003440	S.RESISTOR	ERJ3GEYJ 102 V (1 kΩ)
R82	7030003560	S.RESISTOR	ERJ3GEYJ 103 V (10 kΩ)
R83	7030003440	S.RESISTOR	ERJ3GEYJ 102 V (1 kΩ)
R92	7030003560	S.RESISTOR	ERJ3GEYJ 103 V (10 kΩ)
R93	7030003440	S.RESISTOR	ERJ3GEYJ 102 V (1 kΩ)
R94	7030003440	S.RESISTOR	ERJ3GEYJ 102 V (1 kΩ)
R95	7030003440	S.RESISTOR	ERJ3GEYJ 102 V (1 kΩ)
R96	7030003440	S.RESISTOR	ERJ3GEYJ 102 V (1 kΩ)
R97	7030003440	S.RESISTOR	ERJ3GEYJ 102 V (1 kΩ)
R98	7030003440	S.RESISTOR	ERJ3GEYJ 102 V (1 kΩ)
R99	7030003440	S.RESISTOR	ERJ3GEYJ 102 V (1 kΩ)
R100	7030003440	S.RESISTOR	ERJ3GEYJ 102 V (1 kΩ)
R104	7030003580	S.RESISTOR	ERJ3GEYJ 153 V (15 kΩ)
R124	7030003770	S.RESISTOR	ERJ3GEYJ 564 V (560 kΩ)
R125	7030003320	S.RESISTOR	ERJ3GEYJ 101 V (100 Ω)
R130	7030003440	S.RESISTOR	ERJ3GEYJ 102 V (1 kΩ)
R133	7030003550	S.RESISTOR	ERJ3GEYJ 822 V (8.2 kΩ) [EUR], [ITA] only
R134	7030003760	S.RESISTOR	ERJ3GEYJ 474 V (470 kΩ) [EUR], [ITA] only
R135	7030003640	S.RESISTOR	ERJ3GEYJ 473 V(47 kΩ) [EUR], [ITA] only
R136	7030003560	S.RESISTOR	ERJ3GEYJ 103 V (10 kΩ)
R137	7030003560	S.RESISTOR	ERJ3GEYJ 103 V (10 kΩ)
R138	7030003560	S.RESISTOR	ERJ3GEYJ 103 V (10 kΩ)
R143	7030003600	S.RESISTOR	ERJ3GEYJ 223 V (22 kΩ)
R144	7030003600	S.RESISTOR	ERJ3GEYJ 223 V (22 kΩ)
R145	7030003440	S.RESISTOR	ERJ3GEYJ 102 V (1 kΩ)
R148	7030003680	S.RESISTOR	ERJ3GEYJ 104 V (100 kΩ)
R149	7030003550	S.RESISTOR	ERJ3GEYJ 822 V (8.2 kΩ)
R150	7030003550	S.RESISTOR	ERJ3GEYJ 822 V (8.2 kΩ)
R151	7030003550	S.RESISTOR	ERJ3GEYJ 822 V (8.2 kΩ)
R152	7030003640	S.RESISTOR	ERJ3GEYJ 473 V (47 kΩ)
R153	7030003520	S.RESISTOR	ERJ3GEYJ 472 V (4.7 kΩ)
R154	7030003530	S.RESISTOR	ERJ3GEYJ 562 V (5.6 kΩ)
R155	7030003320	S.RESISTOR	ERJ3GEYJ 101 V (100 Ω)
R156	7030003300	S.RESISTOR	ERJ3GEYJ 680 V (68 Ω)
R157	7030003340	S.RESISTOR	ERJ3GEYJ 151 V (150 Ω)
R158	7030003410	S.RESISTOR	ERJ3GEYJ 561 V (560 Ω)
R159	7030003460	S.RESISTOR	ERJ3GEYJ 152 V (1.5 kΩ)
R160	7030003320	S.RESISTOR	ERJ3GEYJ 101 V (100 Ω)
R161	7030003340	S.RESISTOR	ERJ3GEYJ 151 V (150 Ω)
R162	7030003370	S.RESISTOR	ERJ3GEYJ 271 V (270 Ω)
R163	7030003560	S.RESISTOR	ERJ3GEYJ 103 V (10 kΩ)
C1	4030006860	S.CERAMIC	C1608 JB 1H 102K-T-A
C2	4030006860	S.CERAMIC	C1608 JB 1H 102K-T-A
C3	4030006860	S.CERAMIC	C1608 JB 1H 102K-T-A
C4	4030006860	S.CERAMIC	C1608 JB 1H 102K-T-A
C5	4030006860	S.CERAMIC	C1608 JB 1H 102K-T-A
C6	4030007090	S.CERAMIC	C1608 CH 1H 470J-T-A
C7	4030008630	S.CERAMIC	C1608 JF 1C 104Z-T-A
C8	4510004630	S.ELECTROLYTIC	ECEV1CA100SR
C9	4030006900	S.CERAMIC	C1608 JB 1E 103K-T-A
C10	4510004630	S.ELECTROLYTIC	ECEV1CA100SR
C11	4030008680	S.CERAMIC	C2012 JF 1C 105Z-T-A
C12	4030008630	S.CERAMIC	C1608 JF 1C 104Z-T-A
C13	4030006860	S.CERAMIC	C1608 JB 1H 102K-T-A
C14	4510004630	S.ELECTROLYTIC	ECEV1CA100SR
C15	4030008900	S.CERAMIC	C1608 JB 1C 333K-T-A
C16	4030007020	S.CERAMIC	C1608 CH 1H 120J-T-A
C17	4030008680	S.CERAMIC	C2012 JF 1C 105Z-T-A
C18	4030009490	S.CERAMIC	C1608 JB 1H 821K-T-A
C19	4030008470	S.CERAMIC	C1608 JB 1H 272K-T-A
C20	4030007120	S.CERAMIC	C1608 CH 1H 820J-T-A
C21	4030007130	S.CERAMIC	C1608 CH 1H 101J-T-A
C22	4030006860	S.CERAMIC	C1608 JB 1H 102K-T-A
C23	4030008630	S.CERAMIC	C1608 JF 1C 104Z-T-A
C24	4510004630	S.ELECTROLYTIC	ECEV1CA100SR
C25	4030008630	S.CERAMIC	C1608 JF 1C 104Z-T-A
C26	4030008630	S.CERAMIC	C1608 JF 1C 104Z-T-A
C27	4030008630	S.CERAMIC	C1608 JF 1C 104Z-T-A
C30	4030008630	S.CERAMIC	C1608 JF 1C 104Z-T-A
C31	4030008680	S.CERAMIC	C2012 JF 1C 105Z-T-A
C32	4030006860	S.CERAMIC	C1608 JB 1H 102K-T-A
C33	4030008630	S.CERAMIC	C1608 JF 1C 104Z-T-A
C34	4030006860	S.CERAMIC	C1608 JB 1H 102K-T-A
C35	4030008630	S.CERAMIC	C1608 JF 1C 104Z-T-A
C36	4030008910	S.CERAMIC	C1608 JB 1C 393K-T-A
C37	4030008630	S.CERAMIC	C1608 JF 1C 104Z-T-A

[LOGIC UNIT]

REF NO.	ORDER NO.	DESCRIPTION	
C38	4030009980	S.CERAMIC	C1608 JB 1H 152K-T-A
C39	4030008630	S.CERAMIC	C1608 JF 1C 104Z-T-A
C40	4030008630	S.CERAMIC	C1608 JF 1C 104Z-T-A
C41	4030006900	S.CERAMIC	C1608 JB 1E 103K-T-A
C42	4030007130	S.CERAMIC	C1608 CH 1H 101J-T-A
C45	4030007090	S.CERAMIC	C1608 CH 1H 470J-T-A
C48	4030006860	S.CERAMIC	C1608 JB 1H 102K-T-A
C49	4030006860	S.CERAMIC	C1608 JB 1H 102K-T-A
C50	4030006860	S.CERAMIC	C1608 JB 1H 102K-T-A
C51	4030006860	S.CERAMIC	C1608 JB 1H 102K-T-A
C52	4030006900	S.CERAMIC	C1608 JB 1E 103K-T-A
C53	4030006900	S.CERAMIC	C1608 JB 1E 103K-T-A
C54	4030006860	S.CERAMIC	C1608 JB 1H 102K-T-A
C55	4030006950	S.CERAMIC	C1608 CH 1H 040C-T-A
C56	4030007050	S.CERAMIC	C1608 CH 1H 220J-T-A
C57	4030006860	S.CERAMIC	C1608 JB 1H 102K-T-A
C59	4030006900	S.CERAMIC	C1608 JB 1E 103K-T-A
C60	4510004630	S.ELECTROLYTIC	ECEV1CA100SR
C63	4030006900	S.CERAMIC	C1608 JB 1E 103K-T-A
C64	4030006900	S.CERAMIC	C1608 JB 1E 103K-T-A
C65	4030006900	S.CERAMIC	C1608 JB 1E 103K-T-A
C66	4030006860	S.CERAMIC	C1608 JB 1H 102K-T-A
C67	4030007090	S.CERAMIC	C1608 CH 1H 470J-T-A
C68	4030007090	S.CERAMIC	C1608 CH 1H 470J-T-A
C69	4030006860	S.CERAMIC	C1608 JB 1H 102K-T-A
C70	4030006860	S.CERAMIC	C1608 JB 1H 102K-T-A
C71	4030006860	S.CERAMIC	C1608 JB 1H 102K-T-A
C72	4030007090	S.CERAMIC	C1608 CH 1H 470J-T-A
C73	4030007090	S.CERAMIC	C1608 CH 1H 470J-T-A
C74	4030006860	S.CERAMIC	C1608 JB 1H 102K-T-A
C75	4030006860	S.CERAMIC	C1608 JB 1H 102K-T-A
C76	4030006860	S.CERAMIC	C1608 JB 1H 102K-T-A
C77	4030006860	S.CERAMIC	C1608 JB 1H 102K-T-A
C78	4030006860	S.CERAMIC	C1608 JB 1H 102K-T-A
C79	4030007090	S.CERAMIC	C1608 CH 1H 470J-T-A
C80	4030008630	S.CERAMIC	C1608 JF 1C 104Z-T-A
C81	4030006860	S.CERAMIC	C1608 JB 1H 102K-T-A
C82	4030006860	S.CERAMIC	C1608 JB 1H 102K-T-A
C83	4030006860	S.CERAMIC	C1608 JB 1H 102K-T-A
C84	4030006860	S.CERAMIC	C1608 JB 1H 102K-T-A
C85	4030007090	S.CERAMIC	C1608 CH 1H 470J-T-A
C86	4030006860	S.CERAMIC	C1608 JB 1H 102K-T-A
C87	4030006860	S.CERAMIC	C1608 JB 1H 102K-T-A
C88	4030006900	S.CERAMIC	C1608 JB 1E 103K-T-A
C89	4510004630	S.ELECTROLYTIC	ECEV1CA100SR
C90	4030008630	S.CERAMIC	C1608 JF 1C 104Z-T-A
C91	4030008630	S.CERAMIC	C1608 JF 1C 104Z-T-A
C92	4030008630	S.CERAMIC	C1608 JF 1C 104Z-T-A
C93	4030008880	S.CERAMIC	C1608 JB 1C 223K-T-A
C94	4030007090	S.CERAMIC	C1608 CH 1H 470J-T-A
C95	4030007110	S.CERAMIC	C1608 CH 1H 680J-T-A
DS1	5030001570	LCD	LD-HU10238E
DS2	5040002060	S.LED	SML-020MLT T86
DS3	5040002060	S.LED	SML-020MLT T86
DS4	5040002060	S.LED	SML-020MLT T86
DS5	5040002060	S.LED	SML-020MLT T86
DS6	5040002060	S.LED	SML-020MLT T86
DS7	5040002060	S.LED	SML-020MLT T86
DS8	5040002370	S.LED	SML-010MT T86
DS9	5040002370	S.LED	SML-010MT T86
DS10	5040002370	S.LED	SML-010MT T86
DS11	5040002370	S.LED	SML-010MT T86
DS12	5040002370	S.LED	SML-010MT T86
DS13	5040002370	S.LED	SML-010MT T86
S1	2260002440	S.SWITCH	EVQ-PPPA25
S2	2260002440	S.SWITCH	EVQ-PPPA25
S3	2260002440	S.SWITCH	EVQ-PPPA25
S4	2260002440	S.SWITCH	EVQ-PPPA25
S5	2260002440	S.SWITCH	EVQ-PPPA25
S6	2260002440	S.SWITCH	EVQ-PPPA25
S7	2260002440	S.SWITCH	EVQ-PPPA25
S8	2260002440	S.SWITCH	EVQ-PPPA25
S9	2250000370	ENCODER	EVQ-VENF0124B
J1	6450001470	CONNECTOR	95003-2881
J2	6510020880	CONNECTOR	53244-1217
J3	6510020880	CONNECTOR	53244-1217

S.=Surface mount

[LOGIC UNIT]

REF NO.	ORDER NO.	DESCRIPTION		
W1	7120000470	JUMPER	ERDS2T0	[THA] only
EP1	0910049542	PCB	B 5097B	
EP2	8930045730	LCD CONTACT	SRCN-2088-SP-N-W	

[MAIN UNIT]

REF NO.	ORDER NO.	DESCRIPTION		
IC1	1130007610	S.IC	μPD3140GS-E1 (DS8)	
IC2	1130008560	S.IC	TC75S51F (TE85L)	
IC3	1110002750	S.IC	TA75S01F (TE85R)	
IC4	1150000130	IC	SC-1005	[THA] only
	1150001950	IC	SC-1091	other
IC5	1180001250	S.IC	TA7808F(TE16L)	
IC6	1110003490	S.IC	TA31136FN (D,EL)	
IC7	1110002750	S.IC	TA75S01F (TE85R)	
IC8	1110002550	IC	TA7252AP	
IC9	1180000420	S.IC	TA78L05F (TE12R)	
IC10	1130007700	S.IC	BU4094BCF-T1	
IC11	1140003830	S.IC	TC4W66F(TE12L)	[EUR], [ITA] only
IC12	1140003830	S.IC	TC4W66F(TE12L)	[EUR], [ITA] only
Q1	1530002920	S.TRANSISTOR	2SC4226-T2 R25	
Q2	1530002920	S.TRANSISTOR	2SC4226-T2 R25	
Q3	1590001040	S.TRANSISTOR	DTA113ZU T107	
Q4	1530002920	S.TRANSISTOR	2SC4226-T2 R25	
Q5	1530002920	S.TRANSISTOR	2SC4226-T2 R25	
Q6	1530002920	S.TRANSISTOR	2SC4226-T2 R25	
Q7	1530002060	S.TRANSISTOR	2SC4081 T107 R	
Q11	1530002850	S.TRANSISTOR	2SC4116-BL (TE85R)	
Q12	1510000690	S.TRANSISTOR	2SA1734 (TE12R)	
Q13	1530002680	S.TRANSISTOR	2SC3357-T2	
Q14	1530002340	S.TRANSISTOR	2SC2954-T2B	
Q15	1590000430	S.TRANSISTOR	DTC144EUA T106	
Q16	1590000430	S.TRANSISTOR	DTC144EUA T106	
Q17	1530002850	S.TRANSISTOR	2SC4116-BL (TE85R)	
Q18	1530002280	S.TRANSISTOR	2SC4081 T107 S	
Q19	1520000730	S.TRANSISTOR	2SB934P (DS)-(TX)	
Q20	1580000490	S.FET	3SK166-2-T7	
Q21	1580000490	S.FET	3SK166-2-T7	
Q22	1530002600	S.TRANSISTOR	2SC4215-O (TE85R)	
Q23	1530002060	S.TRANSISTOR	2SC4081 T107 R	
Q24	1530002060	S.TRANSISTOR	2SC4081 T107 R	
Q25	1590001390	S.FET	2SJ144-Y (TE85R)	
Q26	1530002970	S.TRANSISTOR	2SC4684 (TE16R)	
Q27	1510000890	S.TRANSISTOR	DTA143TU T107	
Q28	1530003090	S.TRANSISTOR	2SC4213-B (TE85R)	
Q29	1590000980	S.TRANSISTOR	DTB123EK T147	
Q30	1590000430	S.TRANSISTOR	DTC144EUA T106	
Q31	1590000980	S.TRANSISTOR	DTB123EK T147	
Q32	1590000430	S.TRANSISTOR	DTC144EUA T106	
Q33	1530002920	S.TRANSISTOR	2SC4226-T2 R25	
Q35	1590001320	S.TRANSISTOR	DTC143ZUA T106	
Q36	1530002850	S.TRANSISTOR	2SC4116-BL (TE85R)	
Q37	1530002850	S.TRANSISTOR	2SC4116-BL (TE85R)	
Q38	1530002850	S.TRANSISTOR	2SC4116-BL (TE85R)	[EUR], [ITA] only
Q40	1590000720	S.TRANSISTOR	DTA144EUA T106	[EUR], [ITA] only
Q42	1560000840	S.FET	2SK1829 (TE85R)	[EUR], [ITA] only
D1	1720000370	S.VARICAP	HVU350TRF	
D3	1750000550	S.DIODE	1SS355 TE-17	
D4	1790000980	S.DIODE	MA742 (TX)	
D5	1790000450	S.DIODE	MA862 (TX)	
D6	1750000370	S.DIODE	DA221 TL	
D7	1710000310	DIODE	MI407	
D8	1790000980	S.DIODE	MA742 (TX)	
D9	1790000980	S.DIODE	MA742 (TX)	
D10	1710000290	DIODE	MI308	
D11	1710000290	DIODE	MI308	

[MAIN UNIT]

REF NO.	ORDER NO.	DESCRIPTION	
D12	1750000550	S.DIODE	1SS355 TE-17
D13	1720000370	S.VARICAP	HVU350TRF
D14	1720000370	S.VARICAP	HVU350TRF
D15	1720000370	S.VARICAP	HVU350TRF
D16	1720000370	S.VARICAP	HVU350TRF
D17	1790000980	S.DIODE	MA742 (TX)
D18	1730002340	S.ZENER	MA8047-M (TX)
D19	1750000550	S.DIODE	1SS355 TE-17
D20	1790000700	DIODE	DSA3A1
D21	1750000550	S.DIODE	1SS355 TE-17
D23	1720000370	S.VARICAP	HVU350TRF
D24	1730000520	ZENER	RD20E B2
D25	1750000550	S.DIODE	1SS355 TE-17
FI1	2010002240	MONOLITHIC	FL-288 (15.650 MHz)
FI2	2020001520	CERAMIC	CFWS450F
FI3	2020001460	CERAMIC	CFWS450HT [EUR], [ITA] only
X1	6050009820	XTAL	CR-549 (15.2 MHz)
X2	6070000200	DISCRIMINATOR	CDB450C24
L1	6200004480	S.COIL	MLF1608D R82K-T
L2	6130002480	S.COIL	LB-277
L3	6200003300	S.COIL	ELJNC R22K-F
L4	6200003300	S.COIL	ELJNC R22K-F
L5	6200001620	S.COIL	ELJFC 1R0K-F
L6	6200007380	S.COIL	ELJFC 8R2K-F
L10	6200005740	S.COIL	ELJRE 47NG-F
L11	6200005690	S.COIL	ELJRE 18NG-F
L12	6200006670	S.COIL	ELJRE 68NG-F
L13	6200005710	S.COIL	ELJRE 27NG-F
L14	6200006670	S.COIL	ELJRE 68NG-F
L15	6200005740	S.COIL	ELJRE 47NG-F
L16	6170000180	COIL	LW-19
L17	6110001550	COIL	LA-235
L18	6110001560	COIL	LA-236
L19	6110001610	COIL	LA-244
L20	6110001550	COIL	LA-235
L21	6200004480	S.COIL	MLF1608D R82K-T
L22	6110001550	COIL	LA-235
L23	6110001550	COIL	LA-235
L24	6200004860	S.COIL	MC152-E558CNA-100036
L25	6200002180	S.COIL	NL 252018T-R12J
L26	6200004860	S.COIL	MC152-E558CNA-100036
L27	6200004230	S.COIL	ELJNC R56K-F
L28	6200004860	S.COIL	MC152-E558CNA-100036
L29	6200004860	S.COIL	MC152-E558CNA-100036
L30	6200001920	S.COIL	ELJNC R15K-F
L31	6200003300	S.COIL	ELJNC R22K-F
L32	6200007850	S.COIL	ELJNC R82K-F
L33	6200002940	S.COIL	ELJFC 1R2K-F
L34	6200004480	S.COIL	MLF1608D R82K-T
L35	6200004850	S.COIL	MC152-E558CN-100024
L36	6200004450	S.COIL	ELJFC 6R8M-F
L37	6200004880	S.COIL	ELJFC 3R3K-F
L38	6200004920	S.COIL	MLF1608A 2R2K-T
L39	6200004920	S.COIL	MLF1608A 2R2K-T
R1	7030003690	S.RESISTOR	ERJ3GEYJ 124 V (120 kΩ)
R2	7030003320	S.RESISTOR	ERJ3GEYJ 101 V (100 Ω)
R6	7030003400	S.RESISTOR	ERJ3GEYJ 471 V (470 Ω)
R7	7030003620	S.RESISTOR	ERJ3GEYJ 333 V (33 kΩ)
R8	7030003400	S.RESISTOR	ERJ3GEYJ 471 V (470 Ω)
R9	7030003620	S.RESISTOR	ERJ3GEYJ 333 V (33 kΩ)
R10	7030003320	S.RESISTOR	ERJ3GEYJ 101 V (100 Ω)
R11	7030003320	S.RESISTOR	ERJ3GEYJ 101 V (100 Ω)
R12	7030003690	S.RESISTOR	ERJ3GEYJ 124 V (120 kΩ)
R13	7030003490	S.RESISTOR	ERJ3GEYJ 272 V (2.7 kΩ)
R14	7030003320	S.RESISTOR	ERJ3GEYJ 101 V (100 Ω)
R15	7030003280	S.RESISTOR	ERJ3GEYJ 470 V (47 Ω)
R16	7030003320	S.RESISTOR	ERJ3GEYJ 101 V (100 Ω)
R17	7030003280	S.RESISTOR	ERJ3GEYJ 470 V (47 Ω)
R18	7030003640	S.RESISTOR	ERJ3GEYJ 473 V (47 kΩ)
R19	7030003380	S.RESISTOR	ERJ3GEYJ 331 V (330 Ω)
R20	7030003620	S.RESISTOR	ERJ3GEYJ 333 V (33 kΩ)
R21	7030003520	S.RESISTOR	ERJ3GEYJ 472 V (4.7 kΩ)
R22	7030003840	S.RESISTOR	ERJ3GEYJ 225 V (2.2 MΩ)
R23	7030003840	S.RESISTOR	ERJ3GEYJ 225 V (2.2 MΩ)

S.=Surface mount

[MAIN UNIT]

REF NO.	ORDER NO.	DESCRIPTION	
R24	7030003760	S.RESISTOR	ERJ3GEYJ 474 V (470 kΩ)
R25	7030003420	S.RESISTOR	ERJ3GEYJ 681 V (680 Ω)
R26	7510000420	S.THERMISTOR	TN20-3W472LT
R27	7030003480	S.RESISTOR	ERJ3GEYJ 222 V (2.2 kΩ)
R28	7030003480	S.RESISTOR	ERJ3GEYJ 222 V (2.2 kΩ)
R29	7030003520	S.RESISTOR	ERJ3GEYJ 472 V (4.7 kΩ)
R30	7030003520	S.RESISTOR	ERJ3GEYJ 472 V (4.7 kΩ)
R31	7030003520	S.RESISTOR	ERJ3GEYJ 472 V (4.7 kΩ)
R32	7030003320	S.RESISTOR	ERJ3GEYJ 101 V (100 Ω)
R33	7030003300	S.RESISTOR	ERJ3GEYJ 680 V (68 Ω)
R34	7030003320	S.RESISTOR	ERJ3GEYJ 101 V (100 Ω)
R35	7030000180	S.RESISTOR	MCR10EZHJ 22 Ω (220)
R36	7030003520	S.RESISTOR	ERJ3GEYJ 472 V (4.7 kΩ)
R37	7030003440	S.RESISTOR	ERJ3GEYJ 102 V (1 kΩ)
R38	7030003440	S.RESISTOR	ERJ3GEYJ 102 V (1 kΩ)
R39	7030003520	S.RESISTOR	ERJ3GEYJ 472 V (4.7 kΩ)
R40	7030003430	S.RESISTOR	ERJ3GEYJ 821 V (820 Ω)
R41	7030001130	S.RESISTOR	MCR50JZHJ 100 Ω (101)
R42	7030000180	S.RESISTOR	MCR10EZHJ 22 Ω (220)
R43	7030003320	S.RESISTOR	ERJ3GEYJ 101 V (100 Ω)
R44	7030003600	S.RESISTOR	ERJ3GEYJ 223 V (22 kΩ)
R45	7030003540	S.RESISTOR	ERJ3GEYJ 682 V (6.8 kΩ)
R46	7030003460	S.RESISTOR	ERJ3GEYJ 152 V (1.5 kΩ)
R47	7030003520	S.RESISTOR	ERJ3GEYJ 472 V (4.7 kΩ)
			[TPE] only
	7030003490	S.RESISTOR	ERJ3GEYJ 272 V (2.7 kΩ) other
R48	7030003520	S.RESISTOR	ERJ3GEYJ 472 V (4.7 kΩ)
R49	7310002740	S.TRIMMER	RV-150 (RH03A3A14X0FC)103
R50	7030003800	S.RESISTOR	ERJ3GEYJ 105 V (1 MΩ)
R51	7520000120	POSISTOR	PTH9M04 BC 222TS-2F333
R52	7030003790	S.RESISTOR	ERJ3GEYJ 824 V (820 kΩ)
R53	7030003560	S.RESISTOR	ERJ3GEYJ 103 V (10 kΩ)
R54	7030003640	S.RESISTOR	ERJ3GEYJ 473 V (47 kΩ)
R55	7030003620	S.RESISTOR	ERJ3GEYJ 333 V (33 kΩ)
R56	7030001190	S.RESISTOR	MCR50JZHJ 330 Ω (331)
R57	7030003560	S.RESISTOR	ERJ3GEYJ 103 V (10 kΩ)
R58	7030001110	S.RESISTOR	MCR50JZHJ 68 Ω (680)
			[THA] only
	7030001050	S.RESISTOR	MCR50JZHJ 22 Ω (220) other
R59	7030003320	S.RESISTOR	ERJ3GEYJ 101 V (100 Ω)
R60	7030003540	S.RESISTOR	ERJ3GEYJ 682 V (6.8 kΩ)
R61	7030003550	S.RESISTOR	ERJ3GEYJ 822 V (8.2 kΩ)
R62	7030003550	S.RESISTOR	ERJ3GEYJ 822 V (8.2 kΩ)
R63	7030003540	S.RESISTOR	ERJ3GEYJ 682 V (6.8 kΩ)
R64	7030003720	S.RESISTOR	ERJ3GEYJ 224 V (220 kΩ)
R66	7030003640	S.RESISTOR	ERJ3GEYJ 473 V (47 kΩ)
R67	7030003680	S.RESISTOR	ERJ3GEYJ 104 V (100 kΩ)
R68	7030003340	S.RESISTOR	ERJ3GEYJ 151 V (150 Ω)
R69	7030003440	S.RESISTOR	ERJ3GEYJ 102 V (1 kΩ)
R70	7030003720	S.RESISTOR	ERJ3GEYJ 224 V (220 kΩ)
R71	7030003720	S.RESISTOR	ERJ3GEYJ 224 V (220 kΩ)
R72	7030003720	S.RESISTOR	ERJ3GEYJ 224 V (220 kΩ)
R73	7030003680	S.RESISTOR	ERJ3GEYJ 104 V (100 kΩ)
R74	7030003370	S.RESISTOR	ERJ3GEYJ 271 V (270 Ω)
R75	7030003230	S.RESISTOR	ERJ3GEYJ 180 V (18 Ω)
R76	7030003370	S.RESISTOR	ERJ3GEYJ 271 V (270 Ω)
R77	7030003680	S.RESISTOR	ERJ3GEYJ 104 V (100 kΩ)
R78	7030003300	S.RESISTOR	ERJ3GEYJ 680 V (68 Ω)
R80	7030003320	S.RESISTOR	ERJ3GEYJ 101 V (100 Ω)
R81	7030003430	S.RESISTOR	ERJ3GEYJ 821 V (820 Ω)
R82	7030003470	S.RESISTOR	ERJ3GEYJ 182 V (1.8 kΩ)
R83	7030003670	S.RESISTOR	ERJ3GEYJ 823 V (82 kΩ)
R85	7030003320	S.RESISTOR	ERJ3GEYJ 101 V (100 Ω)
R86	7310002580	S.TRIMMER	RV-108 (RH03A3A15X05A) 104
R89	7030003530	S.RESISTOR	ERJ3GEYJ 562 V (5.6 kΩ)
R90	7030003440	S.RESISTOR	ERJ3GEYJ 102 V (1 kΩ)
R91	7030003490	S.RESISTOR	ERJ3GEYJ 272 V (2.7 kΩ)
R92	7030003380	S.RESISTOR	ERJ3GEYJ 331 V (330 Ω)
R93	7030003680	S.RESISTOR	ERJ3GEYJ 104 V (100 kΩ)
R98	7030003600	S.RESISTOR	ERJ3GEYJ 223 V (22 kΩ)
R100	7030003430	S.RESISTOR	ERJ3GEYJ 821 V (820 Ω)
R101	7030003370	S.RESISTOR	ERJ3GEYJ 271 V (270 Ω)
R102	7030003410	S.RESISTOR	ERJ3GEYJ 561 V (560 Ω)
R103	7030000260	S.RESISTOR	MCR10EZHJ 100 Ω (101)
R104	7030003480	S.RESISTOR	ERJ3GEYJ 222 V (2.2 kΩ)
			[EUR], [ITA] only
	7030003420	S.RESISTOR	ERJ3GEYJ 681 V (680 Ω) other
R105	7030003560	S.RESISTOR	ERJ3GEYJ 103 V (10 kΩ)
R106	7030003400	S.RESISTOR	ERJ3GEYJ 471 V (470 Ω)
R107	7030003640	S.RESISTOR	ERJ3GEYJ 473 V (47 kΩ)
R108	7030003700	S.RESISTOR	ERJ3GEYJ 154 V (150 kΩ)
R109	7030003500	S.RESISTOR	ERJ3GEYJ 332 V (3.3 kΩ)

[MAIN UNIT]

REF NO.	ORDER NO.	DESCRIPTION	
R110	7030003620	S.RESISTOR	ERJ3GEYJ 333 V (33 kΩ)
R111	7510000830	S.THERMISTOR	NTCCF2012 3EH 471KC-T
			[EUR], [ITA] only
	7030000140	S.RESISTOR	MCR10EZHJ 10 Ω (100) other
R113	7030003550	S.RESISTOR	ERJ3GEYJ 822 V (8.2 kΩ)
R114	7030003570	S.RESISTOR	ERJ3GEYJ 123 V (12 kΩ)
R115	7030003600	S.RESISTOR	ERJ3GEYJ 223 V (22 kΩ)
R116	7030003630	S.RESISTOR	ERJ3GEYJ 393 V (39 kΩ)
R117	7030003560	S.RESISTOR	ERJ3GEYJ 103 V (10 kΩ)
R118	7030003840	S.RESISTOR	ERJ3GEYJ 225 V (2.2 MΩ)
R119	7030003380	S.RESISTOR	ERJ3GEYJ 331 V (330 Ω)
R120	7030003600	S.RESISTOR	ERJ3GEYJ 223 V (22 kΩ)
R121	7030003640	S.RESISTOR	ERJ3GEYJ 473 V (47 kΩ)
R122	7030003440	S.RESISTOR	ERJ3GEYJ 102 V (1 kΩ)
R123	7030003760	S.RESISTOR	ERJ3GEYJ 474 V (470 kΩ)
R124	7030003460	S.RESISTOR	ERJ3GEYJ 152 V (1.5 kΩ)
R125	7030003680	S.RESISTOR	ERJ3GEYJ 104 V (100 kΩ)
R126	7030003680	S.RESISTOR	ERJ3GEYJ 104 V (100 kΩ)
R127	7030003620	S.RESISTOR	ERJ3GEYJ 333 V (33 kΩ)
R128	7030003680	S.RESISTOR	ERJ3GEYJ 104 V (100 kΩ)
R129	7030003610	S.RESISTOR	ERJ3GEYJ 273 V (27 kΩ)
R130	7030003680	S.RESISTOR	ERJ3GEYJ 104 V (100 kΩ)
R131	7030003680	S.RESISTOR	ERJ3GEYJ 104 V (100 kΩ)
R132	7030003690	S.RESISTOR	ERJ3GEYJ 124 V (120 kΩ)
R133	7030001010	S.RESISTOR	MCR50JZHJ 10 Ω (100)
R134	7030003440	S.RESISTOR	ERJ3GEYJ 102 V (1 kΩ)
R136	7030003620	S.RESISTOR	ERJ3GEYJ 333 V (33 kΩ)
R137	7030003560	S.RESISTOR	ERJ3GEYJ 103 V (10 kΩ)
R138	7030003560	S.RESISTOR	ERJ3GEYJ 103 V (10 kΩ)
R139	7030003240	S.RESISTOR	ERJ3GEYJ 220 V (22 Ω)
R140	7030003670	S.RESISTOR	ERJ3GEYJ 823 V (82 kΩ)
R141	7030004040	S.RESISTOR	ERJ3GEYJ 4R7 V (4.7 Ω)
R142	7030003490	S.RESISTOR	ERJ3GEYJ 272 V (2.7 kΩ)
R145	7030003560	S.RESISTOR	ERJ3GEYJ 103 V (10 kΩ)
R146	7030003200	S.RESISTOR	ERJ3GEYJ 100 V (10 Ω)
R148	7030003530	S.RESISTOR	ERJ3GEYJ 562 V (5.6 kΩ)
R149	7030003440	S.RESISTOR	ERJ3GEYJ 102 V (1 kΩ)
R150	7030003440	S.RESISTOR	ERJ3GEYJ 102 V (1 kΩ)
R151	7030003680	S.RESISTOR	ERJ3GEYJ 104 V (100 kΩ)
R152	7030003570	S.RESISTOR	ERJ3GEYJ 123 V (12 kΩ)
R154	7030003560	S.RESISTOR	ERJ3GEYJ 103 V (10 kΩ)
R155	7030003450	S.RESISTOR	ERJ3GEYJ 122 V (1.2 kΩ)
			[EUR], [ITA] only
R156	7030003640	S.RESISTOR	ERJ3GEYJ 473 V (47 kΩ)
			[EUR], [ITA] only
R157	7030003640	S.RESISTOR	ERJ3GEYJ 473 V (47 kΩ)
			[EUR], [ITA] only
R159	7030003600	S.RESISTOR	ERJ3GEYJ 223 V (22 kΩ)
R160	7030003550	S.RESISTOR	ERJ3GEYJ 822 V (8.2 kΩ)
			[EUR], [ITA] only
R161	7030003680	S.RESISTOR	ERJ3GEYJ 104 V (100 kΩ)
			[EUR], [ITA] only
R163	7310002740	S.TRIMMER	RV-150 (RH03A3A14X0FC) 103
R164	7510001100	S.THERMISTOR	NTCCM1608 4LH 104KC
R165	7030003660	S.RESISTOR	ERJ3GEYJ 683 V (68 kΩ)
R166	7030003380	S.RESISTOR	ERJ3GEYJ 331 V (330 Ω)
R167	7030003560	S.RESISTOR	ERJ3GEYJ 103 V (10 kΩ)
R168	7030003560	S.RESISTOR	ERJ3GEYJ 103 V (10 kΩ)
C1	4030006860	S.CERAMIC	C1608 JB 1H 102K-T-A
C2	4030007050	S.CERAMIC	C1608 CH 1H 220J-T-A
C3	4030006860	S.CERAMIC	C1608 JB 1H 102K-T-A
C6	4030006860	S.CERAMIC	C1608 JB 1H 102K-T-A
C7	4030006910	S.CERAMIC	C1608 CH 1H 0R5C-T-A
C8	4030006860	S.CERAMIC	C1608 JB 1H 102K-T-A
C9	4030009570	S.CERAMIC	C1608 CH 1H 0R3B-T-A
C10	4030006860	S.CERAMIC	C1608 JB 1H 102K-T-A
C11	4030006860	S.CERAMIC	C1608 JB 1H 102K-T-A
C13	4030006910	S.CERAMIC	C1608 CH 1H 0R5C-T-A
C14	4030006860	S.CERAMIC	C1608 JB 1H 102K-T-A
C15	4030006860	S.CERAMIC	C1608 JB 1H 102K-T-A
C16	4030007060	S.CERAMIC	C1608 CH 1H 270J-T-A
C17	4030006970	S.CERAMIC	C1608 CH 1H 060D-T-A
C18	4030007060	S.CERAMIC	C1608 CH 1H 270J-T-A
C19	4030006860	S.CERAMIC	C1608 JB 1H 102K-T-A
C20	4030010780	S.CERAMIC	C1608 CH 1H 1R5C-T-A
C21	4030006860	S.CERAMIC	C1608 JB 1H 102K-T-A
C22	4030006860	S.CERAMIC	C1608 JB 1H 102K-T-A
C23	4030006860	S.CERAMIC	C1608 JB 1H 102K-T-A
C24	4510004630	S.ELECTROLYTIC	ECEV1CA100SR
C25	4030006860	S.CERAMIC	C1608 JB 1H 102K-T-A

S.=Surface mount

[MAIN UNIT]

REF NO.	ORDER NO.	DESCRIPTION	
C26	4030006860	S.CERAMIC	C1608 JB 1H 102K-T-A
C27	4030006860	S.CERAMIC	C1608 JB 1H 102K-T-A
C28	4030006860	S.CERAMIC	C1608 JB 1H 102K-T-A
C29	4030006860	S.CERAMIC	C1608 JB 1H 102K-T-A
C30	4030006860	S.CERAMIC	C1608 JB 1H 102K-T-A
C31	4550006470	S.TANTALUM	TEMSVB2 1D 106M-8L
C32	4030006860	S.CERAMIC	C1608 JB 1H 102K-T-A
C33	4030007050	S.CERAMIC	C1608 CH 1H 220J-T-A
C34	4030007050	S.CERAMIC	C1608 CH 1H 220J-T-A
C35	4030006860	S.CERAMIC	C1608 JB 1H 102K-T-A
C36	4030006860	S.CERAMIC	C1608 JB 1H 102K-T-A
C37	4030006860	S.CERAMIC	C1608 JB 1H 102K-T-A
C39	4030006860	S.CERAMIC	C1608 JB 1H 102K-T-A
C40	4030006860	S.CERAMIC	C1608 JB 1H 102K-T-A
C41	4030006930	S.CERAMIC	C1608 CH 1H 020C-T-A
C42	4030006860	S.CERAMIC	C1608 JB 1H 102K-T-A
C43	4030007010	S.CERAMIC	C1608 CH 1H 100D-T-A
C44	4030007020	S.CERAMIC	C1608 CH 1H 120J-T-A
C45	4030006860	S.CERAMIC	C1608 JB 1H 102K-T-A
C46	4030006860	S.CERAMIC	C1608 JB 1H 102K-T-A
C47	4030007050	S.CERAMIC	C1608 CH 1H 220J-T-A
C48	4030007040	S.CERAMIC	C1608 CH 1H 180J-T-A
C49	4030007040	S.CERAMIC	C1608 CH 1H 180J-T-A
C50	4030006860	S.CERAMIC	C1608 JB 1H 102K-T-A
C51	4030006860	S.CERAMIC	C1608 JB 1H 102K-T-A
C52	4030006860	S.CERAMIC	C1608 JB 1H 102K-T-A
C53	4030011120	S.CERAMIC	GRM42-6 CH 100D 500PT
C55	4010005790	CERAMIC	HM60SJ YB 102K 500V
C56	4030011170	S.CERAMIC	GRM42-6 CH 180J 500PT
C57	4010007630	CERAMIC	HM60SJ CH 270J 500V
C58	4030011020	S.CERAMIC	GRM42-6 CK 010C 500PT
C59	4030007020	S.CERAMIC	C1608 CH 1H 120J-T-A
C60	4030011020	S.CERAMIC	GRM42-6 CK 010C 500PT
C61	4030007020	S.CERAMIC	C1608 CH 1H 120J-T-A
C62	4030011190	S.CERAMIC	GRM42-6 CH 270J 500PT
C63	4030011190	S.CERAMIC	GRM42-6 CH 270J 500PT
C64	4030011160	S.CERAMIC	GRM42-6 CH 150J 500PT
C65	4030006860	S.CERAMIC	C1608 JB 1H 102K-T-A
C66	4010005540	CERAMIC	HM60SJ SL 030C 500V
C67	4030007050	S.CERAMIC	C1608 CH 1H 220J-T-A
C69	4030006860	S.CERAMIC	C1608 JB 1H 102K-T-A
C70	4030006960	S.CERAMIC	C1608 CH 1H 050C-T-A
C72	4030007080	S.CERAMIC	C1608 CH 1H 390J-T-A
C73	4030006940	S.CERAMIC	C1608 CH 1H 030C-T-A
C74	4030006860	S.CERAMIC	C1608 JB 1H 102K-T-A
C75	4030006860	S.CERAMIC	C1608 JB 1H 102K-T-A
C76	4030006860	S.CERAMIC	C1608 JB 1H 102K-T-A
C77	4030006860	S.CERAMIC	C1608 JB 1H 102K-T-A
C78	4030006860	S.CERAMIC	C1608 JB 1H 102K-T-A
C79	4030006970	S.CERAMIC	C1608 CH 1H 060D-T-A
C80	4030008560	S.CERAMIC	C1608 CH 1H 300J-T-A
C81	4030006930	S.CERAMIC	C1608 CH 1H 020C-T-A
C82	4030006920	S.CERAMIC	C1608 CH 1H 010C-T-A
C83	4030006960	S.CERAMIC	C1608 CH 1H 050C-T-A
C84	4030007080	S.CERAMIC	C1608 CH 1H 390J-T-A
C85	4030006920	S.CERAMIC	C1608 CH 1H 010C-T-A
C86	4030006920	S.CERAMIC	C1608 CH 1H 010C-T-A
C87	4030006970	S.CERAMIC	C1608 CH 1H 060D-T-A
C88	4030007080	S.CERAMIC	C1608 CH 1H 390J-T-A
C89	4030006940	S.CERAMIC	C1608 CH 1H 030C-T-A
C90	4030006980	S.CERAMIC	C1608 CH 1H 070D-T-A
C91	4030006860	S.CERAMIC	C1608 JB 1H 102K-T-A
C92	4030007130	S.CERAMIC	C1608 CH 1H 101J-T-A
C93	4030006860	S.CERAMIC	C1608 JB 1H 102K-T-A
C94	4030006860	S.CERAMIC	C1608 JB 1H 102K-T-A
C95	4030006960	S.CERAMIC	C1608 CH 1H 050C-T-A
C96	4030006860	S.CERAMIC	C1608 JB 1H 102K-T-A
C97	4030006860	S.CERAMIC	C1608 JB 1H 102K-T-A
C99	4030007120	S.CERAMIC	C1608 CH 1H 820J-T-A
C100	4030006860	S.CERAMIC	C1608 JB 1H 102K-T-A
C101	4030006860	S.CERAMIC	C1608 JB 1H 102K-T-A
C102	4030008680	S.CERAMIC	C2012 JF 1C 105Z-T-A
C103	4030006860	S.CERAMIC	C1608 JB 1H 102K-T-A
C105	4550000530	S.TANTALUM	TESVA 1V 104M1-8L
C106	4030006860	S.CERAMIC	C1608 JB 1H 102K-T-A
C107	4550000530	S.TANTALUM	TESVA 1V 104M1-8L
C108	4550002890	S.TANTALUM	TESVA 1A 225M1-8L
C109	4030006900	S.CERAMIC	C1608 JB 1E 103K-T-A
C111	4030007020	S.CERAMIC	C1608 CH 1H 120J-T-A
C112	4030007020	S.CERAMIC	C1608 CH 1H 120J-T-A
C113	4030006930	S.CERAMIC	C1608 CH 1H 020C-T-A
C114	4030006960	S.CERAMIC	C1608 CH 1H 050C-T-A

[MAIN UNIT]

REF NO.	ORDER NO.	DESCRIPTION	
C116	4030001830	S.CERAMIC	GRM40 RH 330J 50PT
C117	4030001820	S.CERAMIC	GRM40 RH 220J 50PT
C118	4030001810	S.CERAMIC	GRM40 RH 180J 50PT
C119	4610002160	S.TRIMMER	CTZ3S-30C-W1-AF
C121	4030006860	S.CERAMIC	C1608 JB 1H 102K-T-A
C128	4030006860	S.CERAMIC	C1608 JB 1H 102K-T-A
C129	4030008630	S.CERAMIC	C1608 JF 1C 104Z-T-A
C130	4030005110	S.CERAMIC	C2012 JB 1E 473K-T-A
C131	4030008880	S.CERAMIC	C1608 JB 1C 223K-T-A
C132	4030007130	S.CERAMIC	C1608 CH 1H 101J-T-A
C133	4030006860	S.CERAMIC	C1608 JB 1H 102K-T-A
C134	4030008680	S.CERAMIC	C2012 JF 1C 105Z-T-A
C135	4030006860	S.CERAMIC	C1608 JB 1H 102K-T-A
C136	4030008680	S.CERAMIC	C2012 JF 1C 105Z-T-A
C137	4030008560	S.CERAMIC	C1608 CH 1H 300J-T-A
C139	4030007170	S.CERAMIC	C1608 CH 1H 221J-T-A
C140	4030007170	S.CERAMIC	C1608 CH 1H 221J-T-A
C141	4030006850	S.CERAMIC	C1608 JB 1H 471K-T-A
C142	4030008630	S.CERAMIC	C1608 JF 1C 104Z-T-A
C143	4030006900	S.CERAMIC	C1608 JB 1E 103K-T-A
C144	4030008860	S.CERAMIC	C1608 JB 1C 153K-T-A
C145	4030006860	S.CERAMIC	C1608 JB 1H 102K-T-A
C146	4030008900	S.CERAMIC	C1608 JB 1C 333K-T-A
C147	4030008860	S.CERAMIC	C1608 JB 1C 153K-T-A
C148	4030008770	S.CERAMIC	C1608 JB 1H 562K-T-A
C149	4030008770	S.CERAMIC	C1608 JB 1H 562K-T-A
C150	4030008680	S.CERAMIC	C2012 JF 1C 105Z-T-A
C151	4030008630	S.CERAMIC	C1608 JF 1C 104Z-T-A
C152	4030006860	S.CERAMIC	C1608 JB 1H 102K-T-A
C153	4030006900	S.CERAMIC	C1608 JB 1E 103K-T-A
C154	4030006860	S.CERAMIC	C1608 JB 1H 102K-T-A
C155	4030006860	S.CERAMIC	C1608 JB 1H 102K-T-A
C156	4030006860	S.CERAMIC	C1608 JB 1H 102K-T-A
C157	4030006860	S.CERAMIC	C1608 JB 1H 102K-T-A
C158	4510006020	ELECTROLYTIC	16 MV 2200 HC
C159	4030006860	S.CERAMIC	C1608 JB 1H 102K-T-A
C160	4030006860	S.CERAMIC	C1608 JB 1H 102K-T-A
C161	4030006860	S.CERAMIC	C1608 JB 1H 102K-T-A
C162	4030006860	S.CERAMIC	C1608 JB 1H 102K-T-A
C163	4510004640	S.ELECTROLYTIC	ECEV1CA470SP
C164	4030006860	S.CERAMIC	C1608 JB 1H 102K-T-A
C165	4030006860	S.CERAMIC	C1608 JB 1H 102K-T-A
C166	4510004640	S.ELECTROLYTIC	ECEV1CA470SP
C167	4510004630	S.ELECTROLYTIC	ECEV1CA100SR
C168	4030006860	S.CERAMIC	C1608 JB 1H 102K-T-A
C169	4510006220	S.ELECTROLYTIC	ECEV1CA101UP
C170	4030006860	S.CERAMIC	C1608 JB 1H 102K-T-A
C171	4510004440	S.ELECTROLYTIC	ECEV1HA010SR
C172	4510004440	S.ELECTROLYTIC	ECEV1HA010SR
C173	4030006860	S.CERAMIC	C1608 JB 1H 102K-T-A
C174	4510004540	S.ELECTROLYTIC	ECEV0JA470SR
C175	4510004440	S.ELECTROLYTIC	ECEV1HA010SR
C176	4550006130	S.TANTALUM	ECST1VY224R
C177	4510004640	S.ELECTROLYTIC	ECEV1CA470SP
C178	4510006260	S.ELECTROLYTIC	ECEV1AA471UP
C179	4030006860	S.CERAMIC	C1608 JB 1H 102K-T-A
C180	4030006860	S.CERAMIC	C1608 JB 1H 102K-T-A
C181	4510004640	S.ELECTROLYTIC	ECEV1CA470SP
C182	4510004630	S.ELECTROLYTIC	ECEV1CA100SR
C183	4030006860	S.CERAMIC	C1608 JB 1H 102K-T-A
C184	4030006860	S.CERAMIC	C1608 JB 1H 102K-T-A
C185	4030006860	S.CERAMIC	C1608 JB 1H 102K-T-A
C186	4030006860	S.CERAMIC	C1608 JB 1H 102K-T-A
C187	4030006860	S.CERAMIC	C1608 JB 1H 102K-T-A
C188	4030006860	S.CERAMIC	C1608 JB 1H 102K-T-A
C189	4030006860	S.CERAMIC	C1608 JB 1H 102K-T-A
C190	4030006860	S.CERAMIC	C1608 JB 1H 102K-T-A
C191	4030006860	S.CERAMIC	C1608 JB 1H 102K-T-A
C192	4030006860	S.CERAMIC	C1608 JB 1H 102K-T-A
C193	4030006860	S.CERAMIC	C1608 JB 1H 102K-T-A
C194	4030006860	S.CERAMIC	C1608 JB 1H 102K-T-A
C195	4030006860	S.CERAMIC	C1608 JB 1H 102K-T-A
C196	4030006860	S.CERAMIC	C1608 JB 1H 102K-T-A
C197	4510005870	S.ELECTROLYTIC	ECEV1HA3R3SR
C198	4030006860	S.CERAMIC	C1608 JB 1H 102K-T-A
C199	4030006860	S.CERAMIC	C1608 JB 1H 102K-T-A
C200	4510004630	S.ELECTROLYTIC	ECEV1CA100SR
C201	4510004630	S.ELECTROLYTIC	ECEV1CA100SR
C202	4510004630	S.ELECTROLYTIC	ECEV1CA100SR
C203	4030006860	S.CERAMIC	C1608 JB 1H 102K-T-A
C204	4030006860	S.CERAMIC	C1608 JB 1H 102K-T-A
C205	4030008630	S.CERAMIC	C1608 JF 1C 104Z-T-A

S.=Surface mount

[MAIN UNIT]

REF NO.	ORDER NO.	DESCRIPTION	
C206	4030007130	S.CERAMIC	C1608 CH 1H 101J-T-A
C207	4030008750	S.CERAMIC	C1608 CH 1H 360J-T-A
C208	4030006990	S.CERAMIC	C1608 CH 1H 080D-T-A
C209	4030007000	S.CERAMIC	C1608 CH 1H 090D-T-A
C210	4030006860	S.CERAMIC	C1608 JB 1H 102K-T-A
C211	4030009570	S.CERAMIC	C1608 CH 1H 0R3B-T-A
C214	4030006850	S.CERAMIC	C1608 JB 1H 471K-T-A
C215	4030006900	S.CERAMIC	C1608 JB 1E 103K-T-A
C218	4030006860	S.CERAMIC	C1608 JB 1H 102K-T-A
C219	4030006860	S.CERAMIC	C1608 JB 1H 102K-T-A
C220	4030008630	S.CERAMIC	C1608 JF 1C 104Z-T-A
C221	4030008630	S.CERAMIC	C1608 JF 1C 104Z-T-A
C222	4030006860	S.CERAMIC	C1608 JB 1H 102K-T-A [EUR], [ITA] only
C223	4510004630	S.ELECTROLYTIC	ECEV1CA100SR
C224	4030006860	S.CERAMIC	C1608 JB 1H 102K-T-A
C225	4030006860	S.CERAMIC	C1608 JB 1H 102K-T-A
C226	4030006860	S.CERAMIC	C1608 JB 1H 102K-T-A [EUR], [ITA] only
C227	4030008630	S.CERAMIC	C1608 JF 1C 104Z-T-A [EUR], [ITA] only
C228	4510004540	S.ELECTROLYTIC	ECEV0JA470SR
C229	4030006920	S.CERAMIC	C1608 CH 1H 010C-T-A
C230	4510005860	S.ELECTROLYTIC	ECEV1HA2R2SR
C231	4030011600	S.CERAMIC	C1608 JB 1C 104KT-N
C232	4030006860	S.CERAMIC	C1608 JB 1H 102K-T-A
C233	4030006860	S.CERAMIC	C1608 JB 1H 102K-T-A
C234	4030006860	S.CERAMIC	C1608 JB 1H 102K-T-A
C235	4030006860	S.CERAMIC	C1608 JB 1H 102K-T-A
C236	4030006860	S.CERAMIC	C1608 JB 1H 102K-T-A
C237	4030006860	S.CERAMIC	C1608 JB 1H 102K-T-A
C238	4030006860	S.CERAMIC	C1608 JB 1H 102K-T-A
C239	4030006860	S.CERAMIC	C1608 JB 1H 102K-T-A
C240	4030006860	S.CERAMIC	C1608 JB 1H 102K-T-A
C241	4030006860	S.CERAMIC	C1608 JB 1H 102K-T-A
C242	4030006860	S.CERAMIC	C1608 JB 1H 102K-T-A
C243	4030006860	S.CERAMIC	C1608 JB 1H 102K-T-A
C244	4030008680	S.CERAMIC	C2012 JF 1C 105Z-T-A
J2	6510018040	CONNECTOR	52330-1217
J3	6510018040	CONNECTOR	52330-1217
J4	6450001900	CONNECTOR	HSJ0912-01-020
J5	6510014960	S.CONNECTOR	B2B-ZR-SM3-TF
W1	8900004880	CABLE	OPC-465
W2	7030003860	S.JUMPER	ERJ3GE JPW V
W3	7120000470	JUMPER	ERDS2T0
W5	7030003860	S.JUMPER	ERJ3GE JPW V except [EUR], [ITA]
W6	7030003860	S.JUMPER	ERJ3GE JPW V except [EUR], [ITA]
W7	7030003860	S.JUMPER	ERJ3GE JPW V
W8	7030003860	S.JUMPER	ERJ3GE JPW V
W9	7030003860	S.JUMPER	ERJ3GE JPW V
W10	7030003860	S.JUMPER	ERJ3GE JPW V
EP1	0910049552	PCB	B 5098B
EP2	9026301001	TUBE	0.7(d) L=14 mm

S.=Surface mount

SECTION 6 MECHANICAL PARTS AND DISASSEMBLY

[CHASSIS PARTS]

REF. NO.	ORDER NO.	DESCRIPTION	QTY.
J1	6510004880	Antena connector MR-DSE-01	1
SP1	2510000820	Speaker VS-57-0814	1
MP1	8010017280	2088 chassis	1
MP2	8110006430	2088 cover (include felt, speaker net)	1
MP4	8930045600	2088 SP rubber	1
MP5	8810008660	Screw PH BO M3x8 NI-ZU (BT)	2
MP6	8810008660	Screw PH BO M3x8 NI-ZU (BT)	7
MP7	8810009610	Screw FH M2.6x6 ZK	4
MP8	8810005160	Hex socket bolt M3x20 ZK	2
MP9	8810008660	Screw PH BO M3x8 NI-ZU (BT)	2
MP10	8810008660	Screw PH BO M3x8 NI-ZU (BT)	1
MP15	8930039610	Thermally sheet (C)	3
MP16	8930041160	Thermally sheet (G)	1

[LOGIC UNIT]

REF. NO.	ORDER NO.	DESCRIPTION	QTY.
R61	7210001870	Variable resistor EVU-F2AF20A14 [VOL]	1
R62	7210001860	Variable resistor EVU-F2AF20B14 [SQL]	1
DS1	5030001570	LCD LD-HU10238E	1
S9	2250000370	Encoder EVQ-VENF01 24B	1
EP2	8930045730	LCD contact SRCN-2088-SP-N-W	1
MP1	8210015290	2088 Reflector	1
MP2	8930045610	2088 LCD filter	1
MP3	8210015381	2088 Front panel (A)-1 [THA] only	1
	8210015281	2088 Front panel-1 other	1
MP4	8510011580	2088 Front plate	1
MP5	8930045580	2088 2-button	1
MP6	8930045590	2088 6-button	1
MP7	8610010610	Knob N-266	1
MP8	8610010601	Knob N-267-1	2
MP10	8810008760	Screw PH BO M2x8 NI-ZU (BT)	4
MP11	8930047310	Sponge (FW)	1

[MIAN UNIT]

REF. NO.	ORDER NO.	DESCRIPTION	QTY.
W1	8900004880	Cable OPC-465	1
MP1	8510011660	2088 VCO case	1

[ACCESSORIES]

REF. NO.	ORDER NO.	DESCRIPTION	QTY.
F1	5210000080	Fuse (20A)	1
MC1	Optional product	Microphon HM-97 [EUR], [ITA]	1
	Optional product	Microphon HM-98S [TPE], [USA]	1
	Optional product	Microphon HM-118 [SEA]	1
	Optional product	Microphon HM-118T [THA], [LA]	1
W1	8900003760	Cable OPC-346	1
MP1	8010016380	1542 Mobil bracket (B)	1
MP3	8820000530	Flange bolt M4x8	4
MP4	8810000470	Screw PH M5x12 (+/-)	4
MP5	8810000950	Screw PH A0 M5x16	4
MP7	8850000150	Flat washer M5 NI BS	4
MP8	8830000120	Nut M5	4

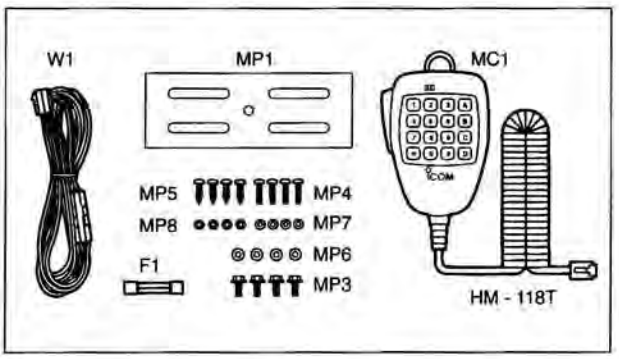

Screw abbreviations
A, B0, BT: Self-tapping
PH: Pan head
FH: Flat head
BiH: Bind head
NI: Nickel
SUS: Stainless
ZK: Black

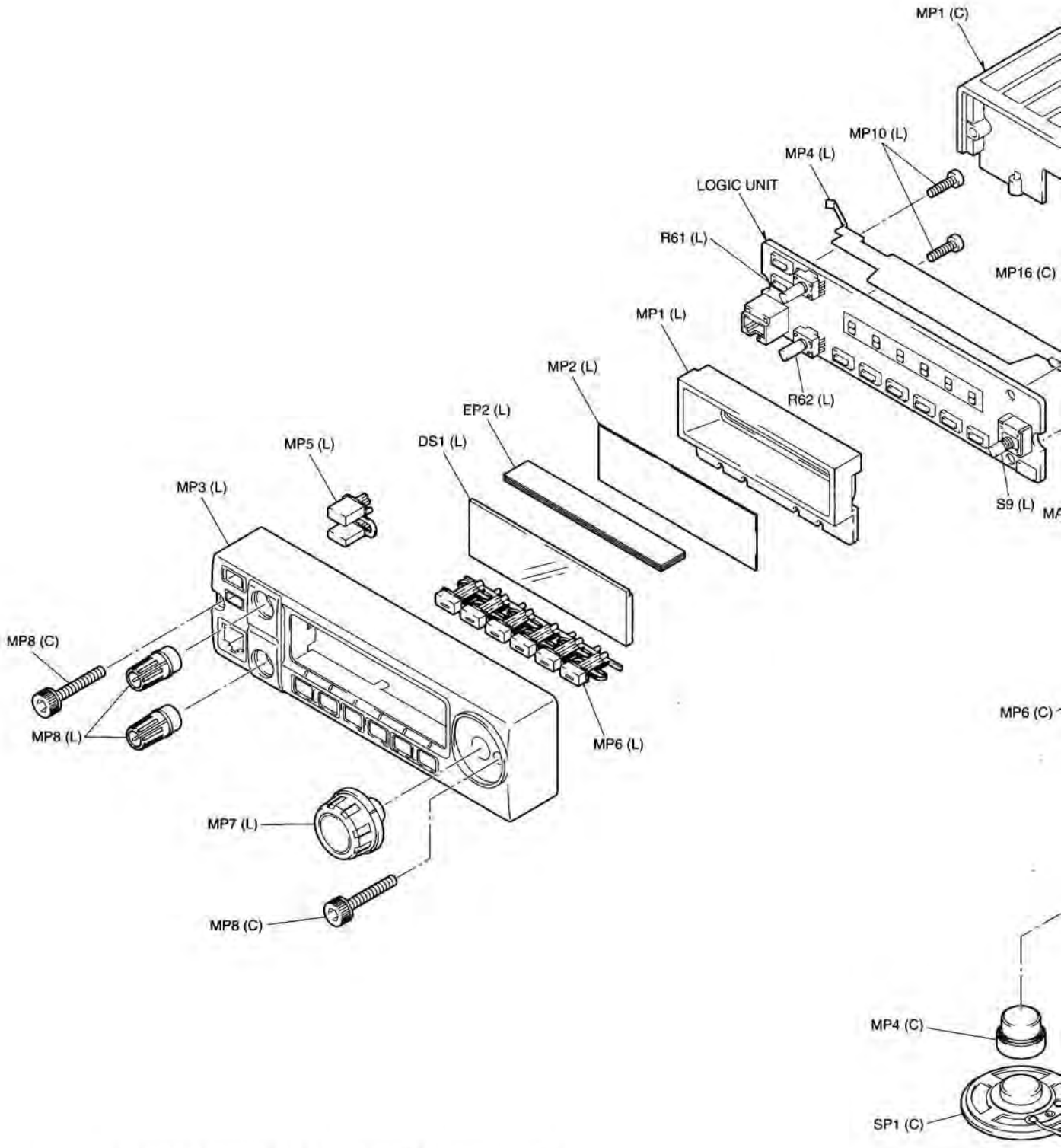

UNIT abbreviation (C): CHASSIS PARTS, (L): LOGIC UNIT, (M): MAIN UNIT

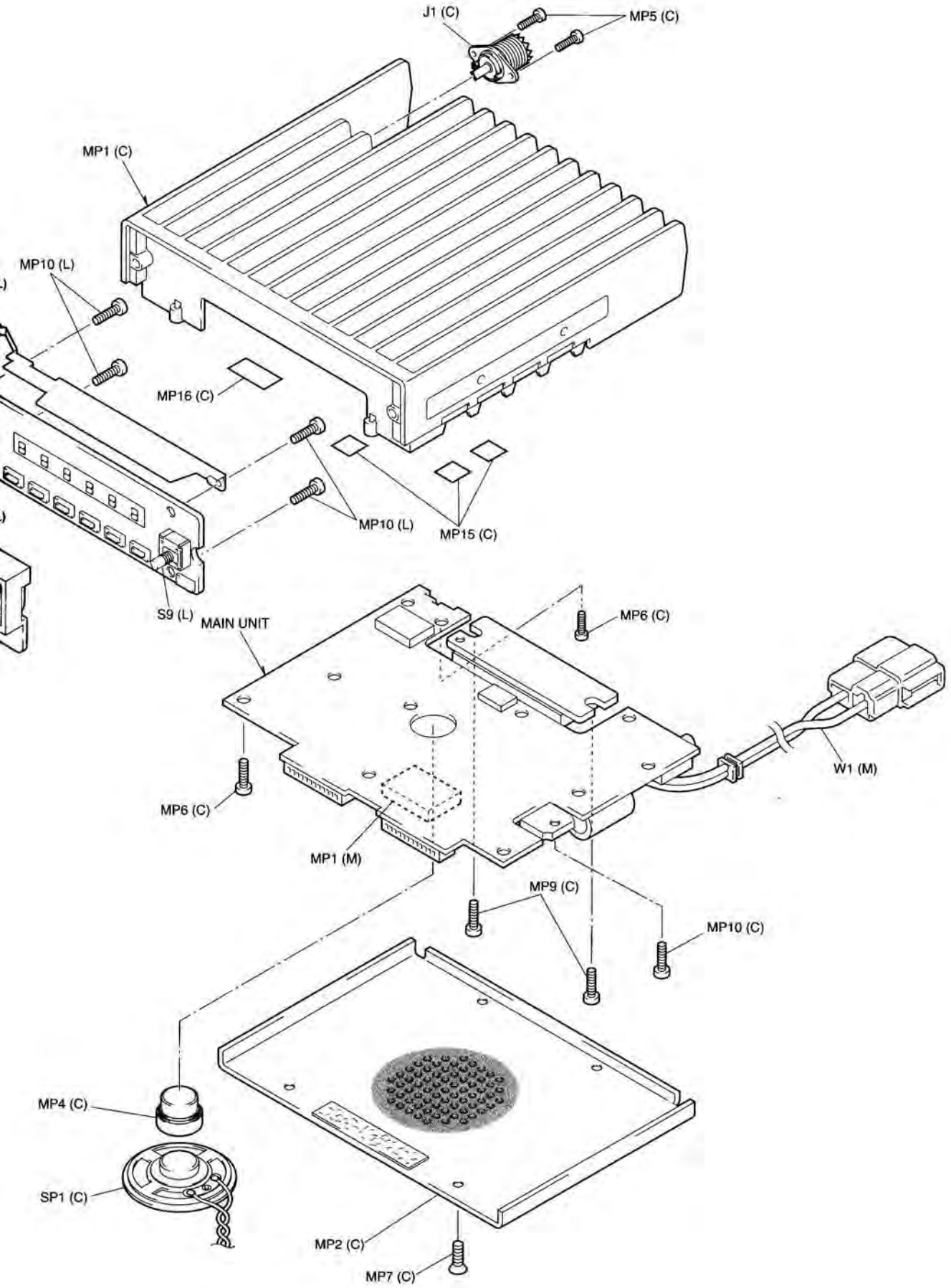
J1 (C)
MP5 (C)
MP1 (C)
MP10 (L)
MP16 (C)
MP10 (L)
MP15 (C)
S9 (L)
MAIN UNIT
MP6 (C)
W1 (M)
MP6 (C)
MP1 (M)
MP9 (C)
MP10 (C)
MP4 (C)
SP1 (C)
MP2 (C)
MP7 (C)

SECTION 7 SEMI-CONDUCTOR INFORMATION

• TRANSISTOR AND FET'S

2SA1576 R (Symbol: FR)	**2SA1734 Q** (Symbol: LB)	**2SC2954** (Symbol: QK)	**2SC3357** (Symbol: RK)	**2SC4081 R** (Symbol: BR)
2SC4081 S (Symbol: BS)	**2SC4116 BL** (Symbol: LL)	**2SC4213 B** (Symbol: AB)	**2SC4215 O** (Symbol: QO)	**2SC4226 R25** (Symbol: R25)
2SD999 CK (Symbol: CK)	**2SJ144 Y** (Symbol: VY)	**2SK1829** (Symbol: KI)	**3SK166 2** (Symbol: K)	**DTA113 ZU** (Symbol: 111)
DTA114 EU (Symbol: 14)	**DTA143 TUA** (Symbol: 93)	**DTA144 EU** (Symbol: 16)	**DTB123 EK** (Symbol: F12)	**DTC143 ZU** (Symbol: 123)
DTC144 EU (Symbol: 26)	**DTC144 TU** (Symbol: 06)			

• DIODES

1SS355 (Symbol: A)	**DA114** (Symbol: AV)	**DA115** (Symbol: AU)	**DA204U** (Symbol: K)	**DA221** (Symbol: K)
DAN202 U (Symbol: N)	**HVU350** (Symbol: 4)	**MA742** (Symbol: M1U)	**MA862** (Symbol: M1I)	**MA8047 M** (Symbol: 4-7)
MA8091 M (Symbol: 9-1)				

SECTION 8 BOARD LAYOUTS

8-1 LOGIC UNIT

- **TOP VIEW**

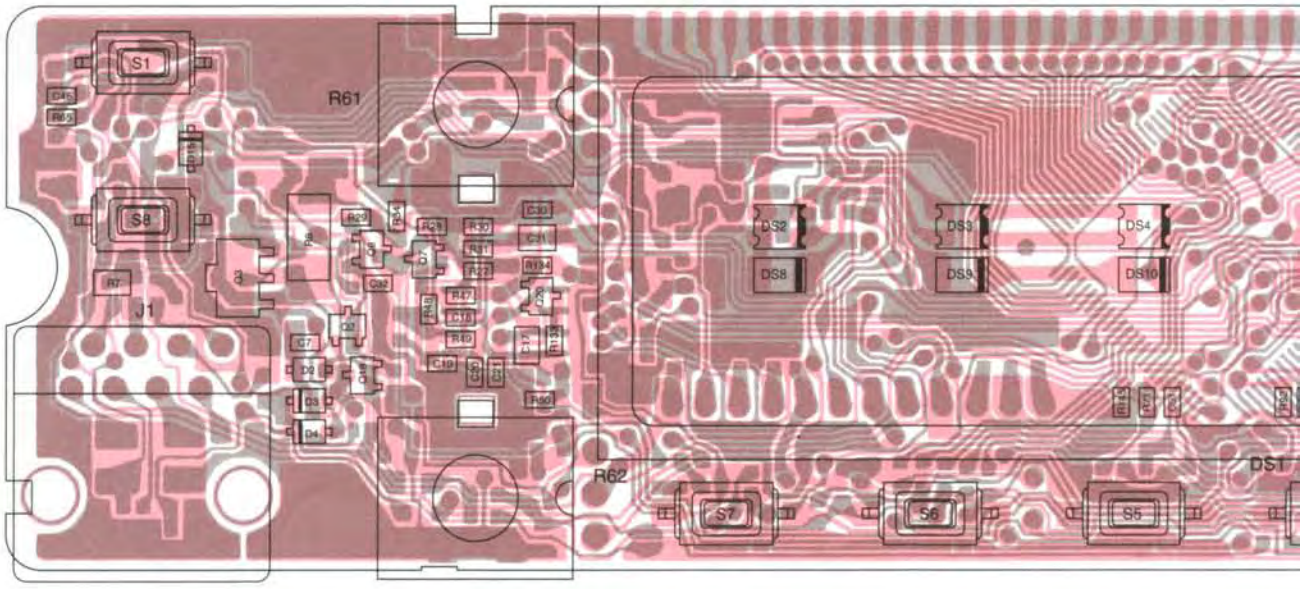

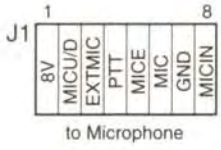

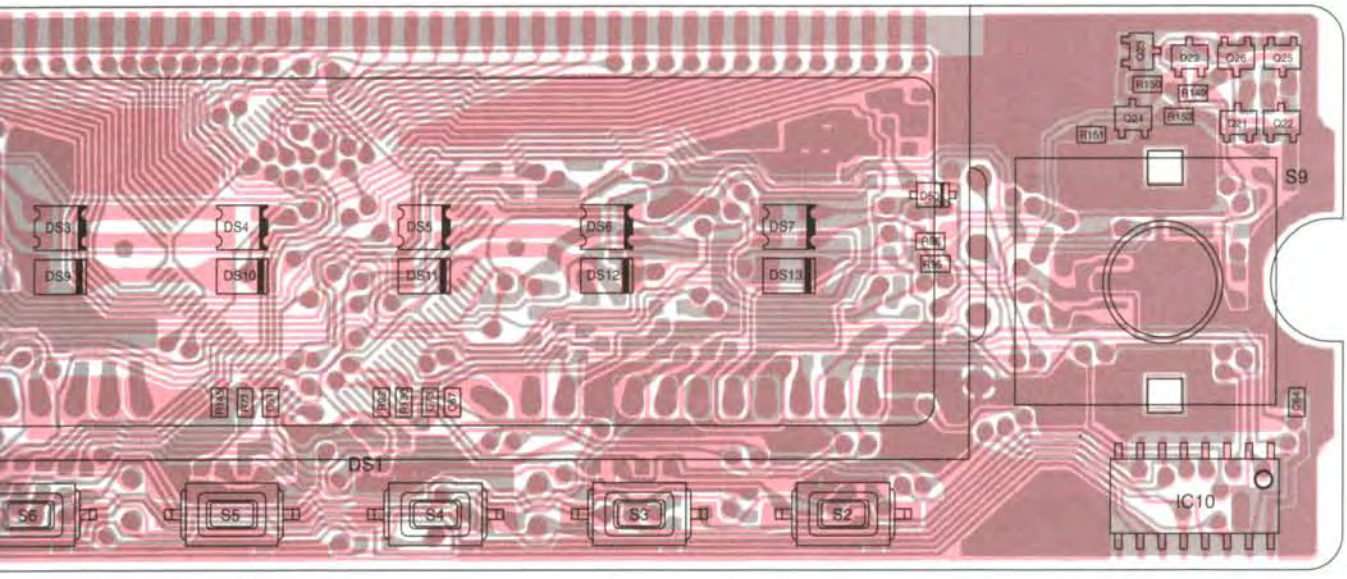
DS3
DS4
DS5
DS6
DS7
DS9
DS10
DS11
DS12
DS13
DS1
S6
S5
S4
S3
S2
S9
IC10
Q29
Q26
Q25
Q24
Q21
Q22
R150
R148
R152
R151
R36
R34

• **BOTTOM VIEW**

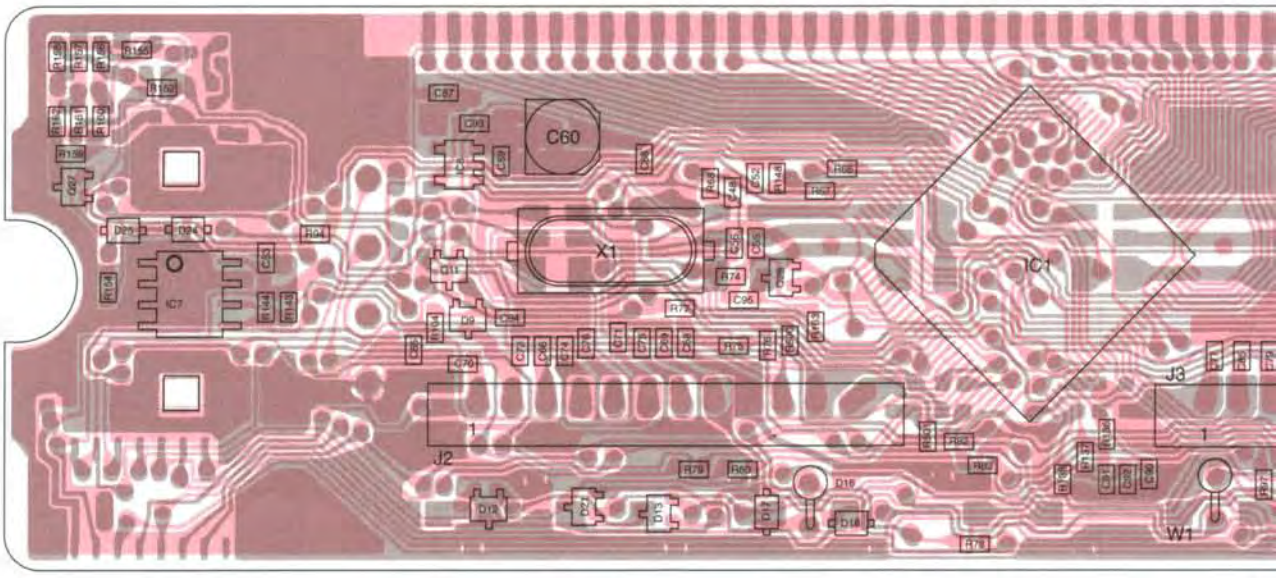

J2 (1 – 12): AMUTE, CLONE, PWRON, HV, C5V, +5V, +8V, MOD, GND, DATA, CK, PLSTB

to MAIN unit J2

J3 (1): UNLK

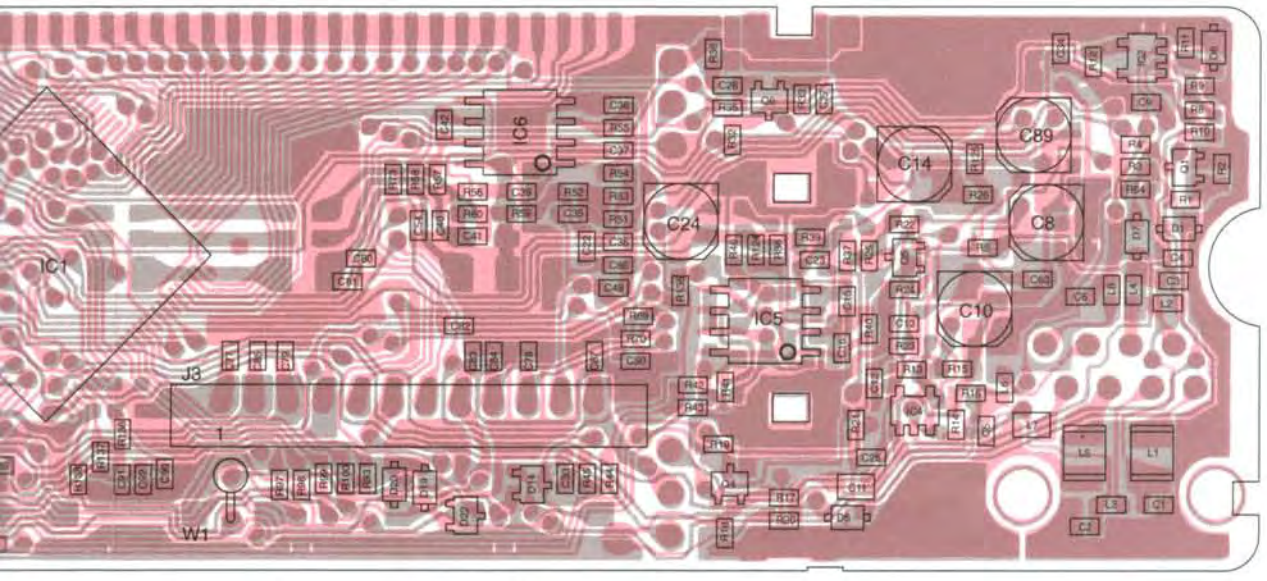

J3

1											12
UNLK	EXSTB	Q'S	W/N	VOL2	AFE	VOL1	RMUTE	SQL	SMET	DETO	SQLV

to MAIN unit J3

8-2 MIAN UNIT

- **TOP VIEW**

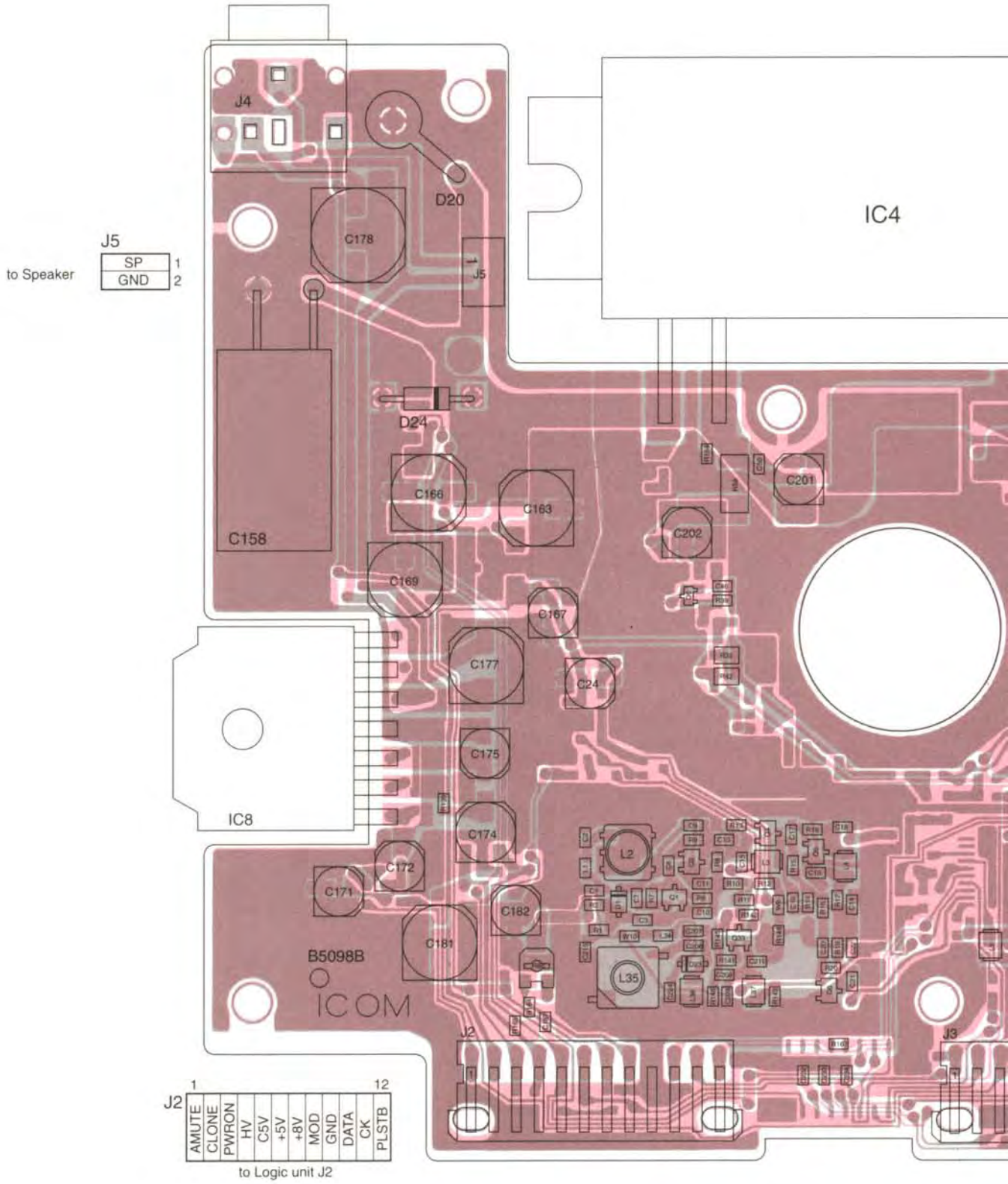

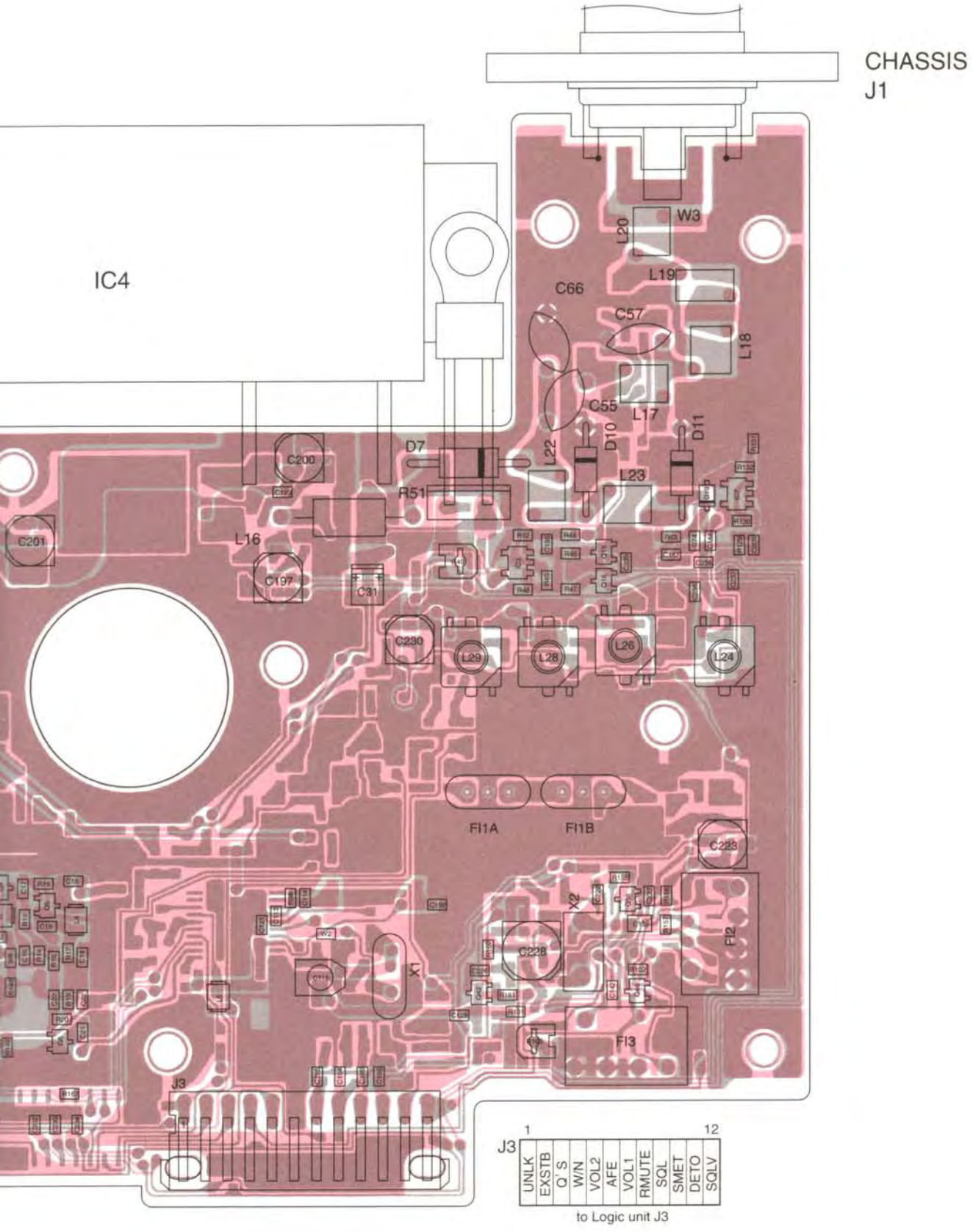
CHASSIS
J1
IC4
W3
L20
L19
C66
C57
L18
C55
L17
D10
D11
D7
L22
L23
C200
R51
C201
L16
C197
C31
C230
L29
L28
L26
L24
FI1A
FI1B
C223
X2
FI2
C228
X1
FI3
J3
1
12
UNLK
EXSTB
Q'S
W/N
VOL2
AFE
VOL1
RMUTE
SQL
SMET
DETO
SQLV
to Logic unit J3

• **BOTTOM VIEW**

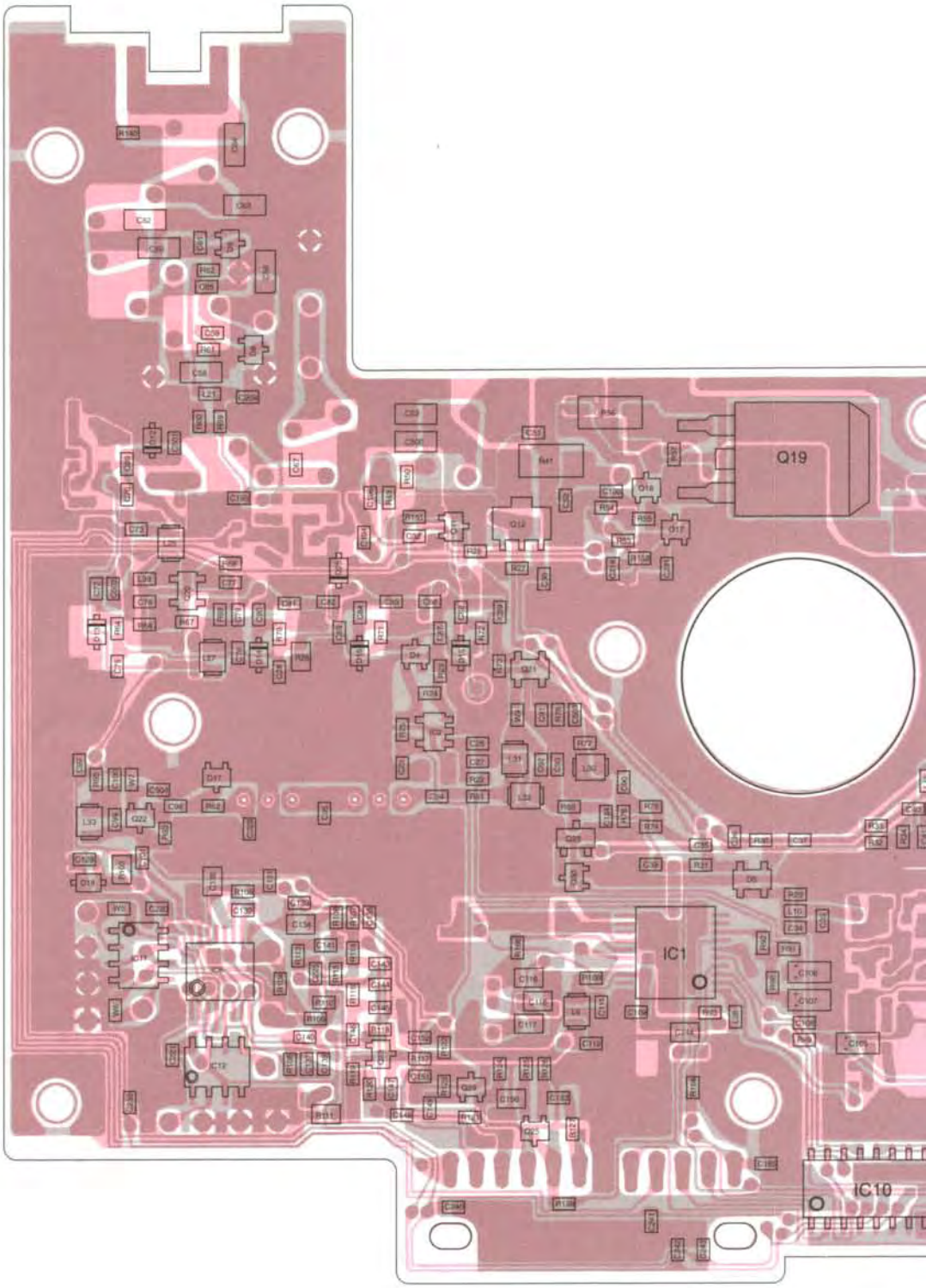

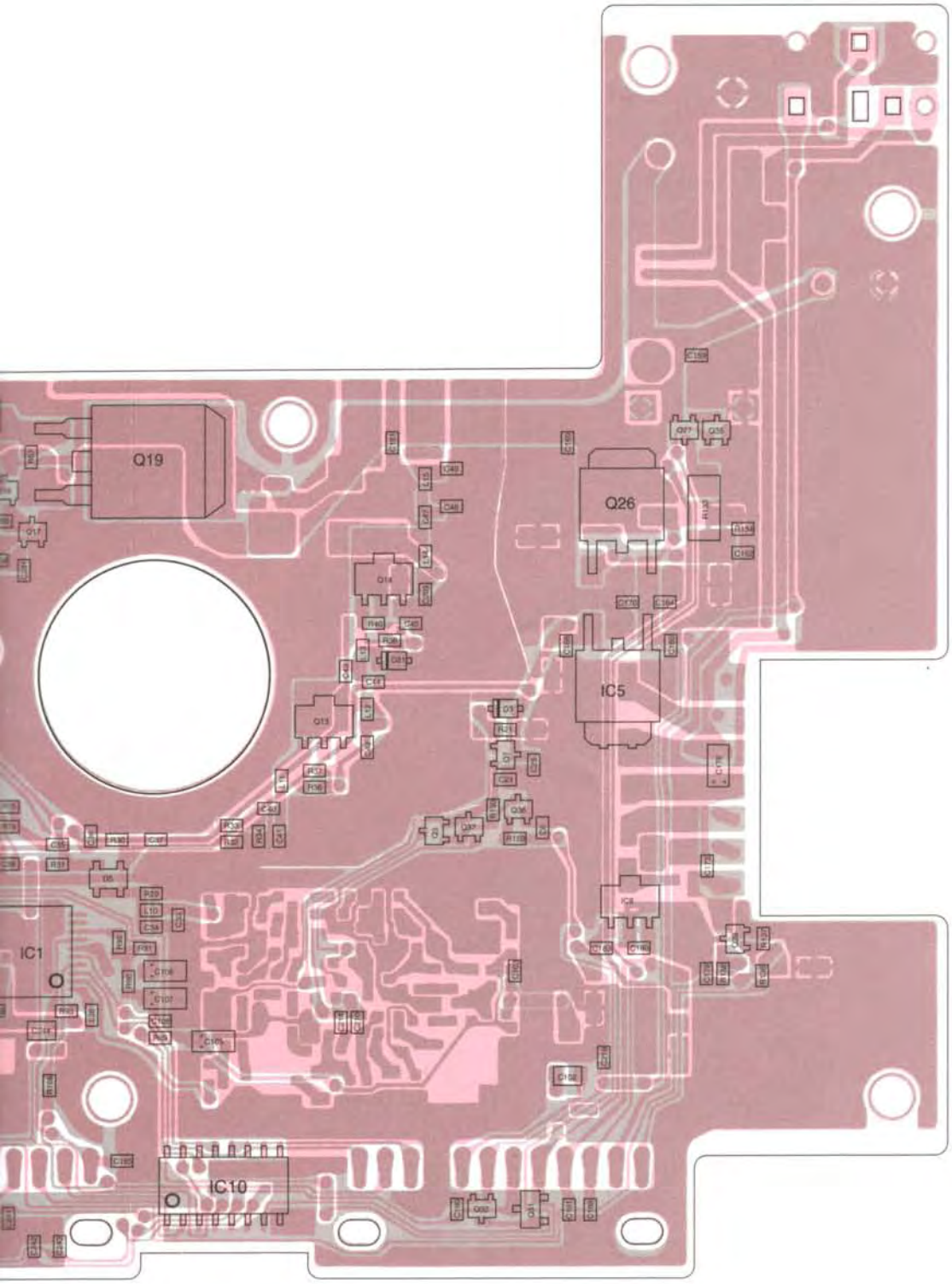
Q19
Q26
IC5
IC1
IC10

SECTION 9 BLOCK DIAGRAM

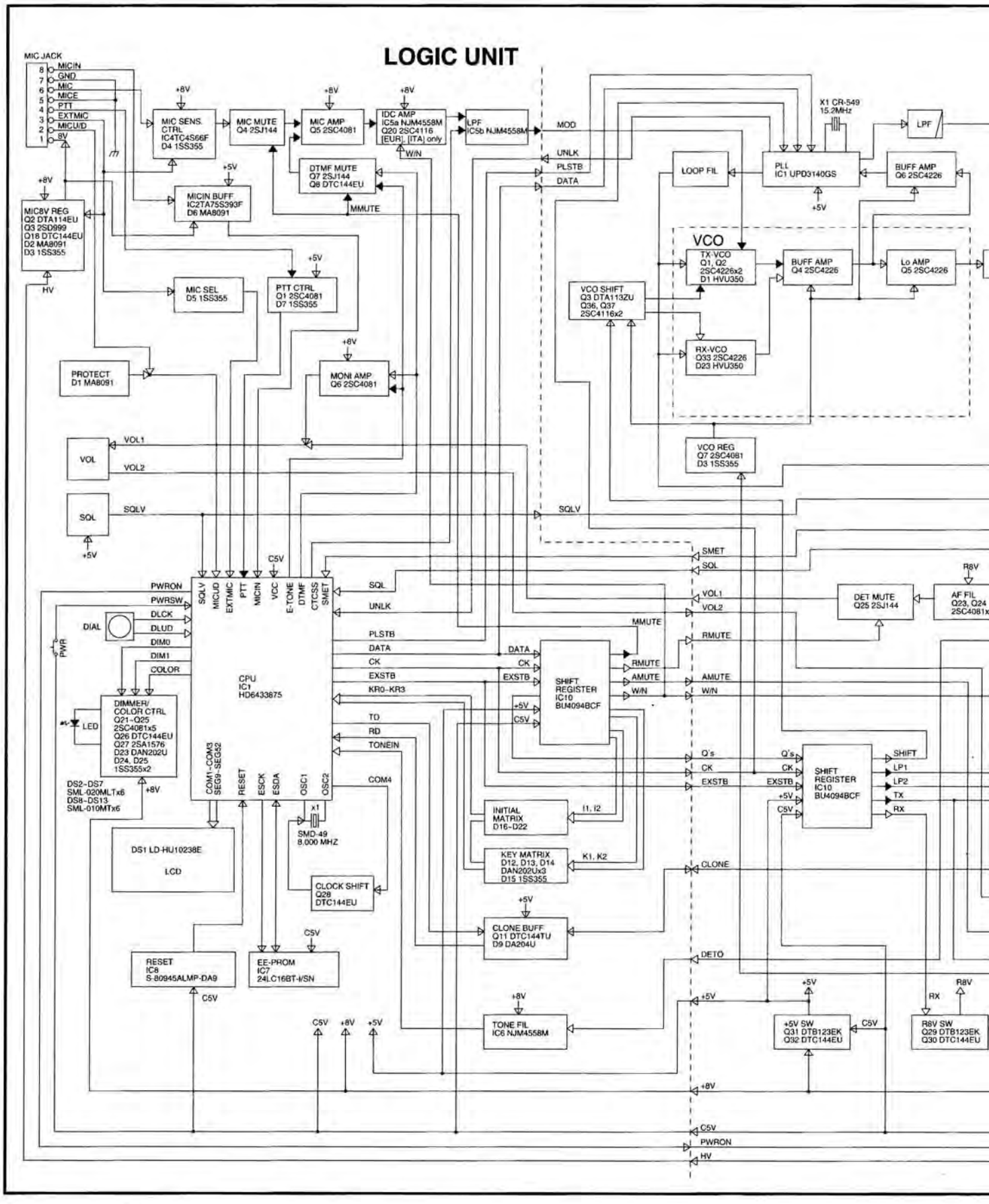

MAIN UNIT

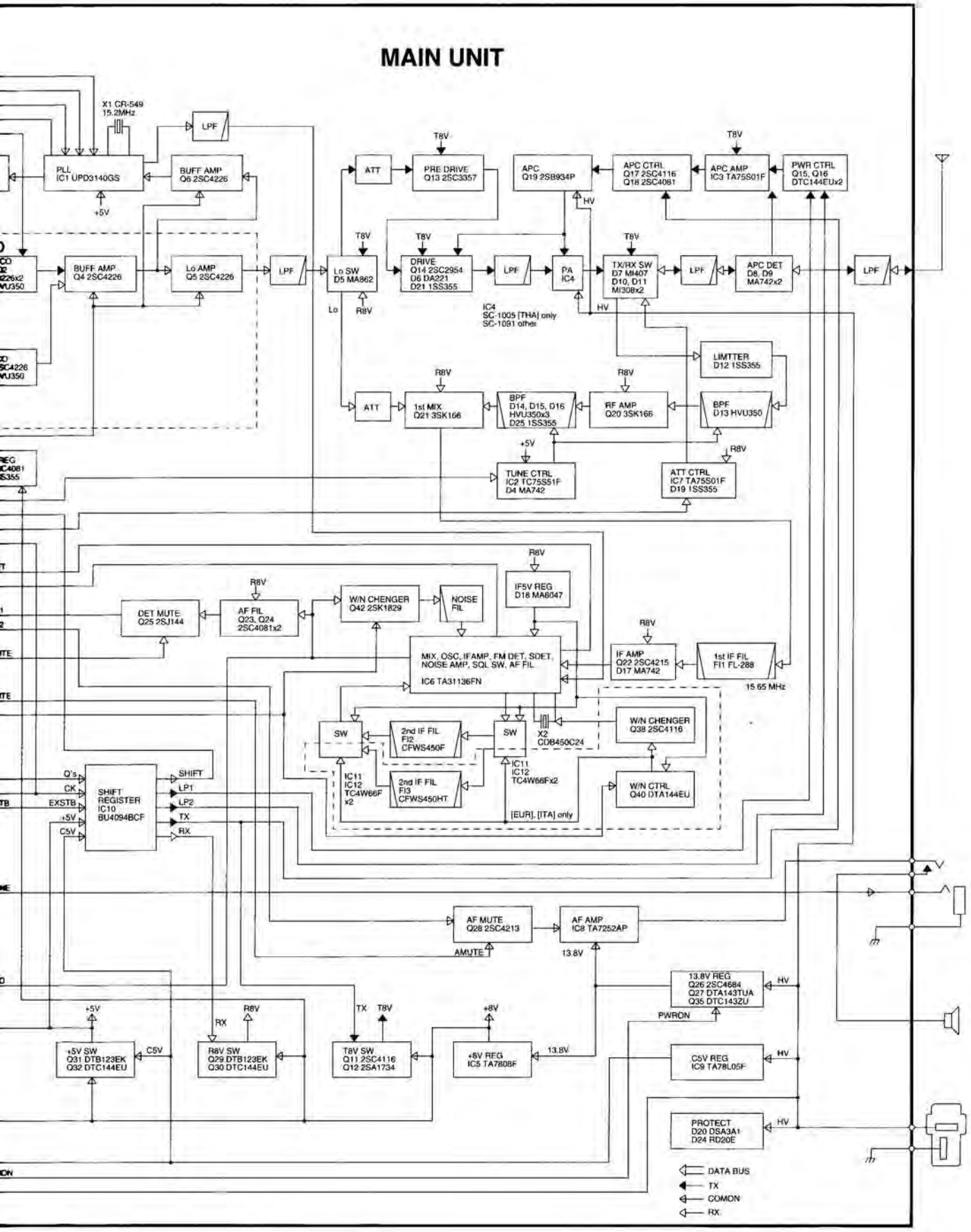
X1 CR-549
15.2MHz
PLL
IC1 UPD3140GS
+5V
LPF
BUFF AMP
Q6 2SC4226
BUFF AMP
Q4 2SC4226
Lo AMP
Q5 2SC4226
LPF
Lo SW
D5 MA862
Lo
R8V
T8V
ATT
PRE DRIVE
Q13 2SC3357
APC
Q19 2SB934P
HV
APC CTRL
Q17 2SC4116
Q18 2SC4081
APC AMP
IC3 TA75S01F
PWR CTRL
Q15, Q16
DTC144EUx2
DRIVE
Q14 2SC2954
D6 DA221
D21 1SS355
PA
IC4
IC4
SC-1005 [THA] only
SC-1091 other
TX/RX SW
D7 MI407
D10, D11
MI308x2
APC DET
D8, D9
MA742x2
LIMITER
D12 1SS355
ATT
1st MIX
Q21 3SK166
BPF
D14, D15, D16
HVU350x3
D25 1SS355
RF AMP
Q20 3SK166
BPF
D13 HVU350
TUNE CTRL
IC2 TC75S51F
D4 MA742
ATT CTRL
IC7 TA75S01F
D19 1SS355
IF5V REG
D18 MA8047
DET MUTE
Q25 2SJ144
AF FIL
Q23, Q24
2SC4081x2
W/N CHENGER
Q42 2SK1829
NOISE
FIL
MIX, OSC, IFAMP, FM DET, SQDET,
NOISE AMP, SQL SW, AF FIL
IC6 TA31136FN
IF AMP
Q22 2SC4215
D17 MA742
1st IF FIL
FI1 FL-288
15.65 MHz
SW
2nd IF FIL
FI2
CFWS450F
SW
X2
CDB450C24
W/N CHENGER
Q38 2SC4116
IC11
IC12
TC4W66F
x2
2nd IF FIL
FI3
CFWS450HT
IC11
IC12
TC4W66Fx2
[EUR], [ITA] only
W/N CTRL
Q40 DTA144EU
Q's
CK
EXSTB
+5V
C5V
SHIFT
REGISTER
IC10
BU4094BCF
SHIFT
LP1
LP2
TX
RX
AF MUTE
Q28 2SC4213
AF AMP
IC8 TA7252AP
AMUTE
13.8V
13.8V REG
Q26 2SC4684
Q27 DTA143TUA
Q35 DTC143ZU
HV
PWRON
+5V SW
Q31 DTB123EK
Q32 DTC144EU
C5V
R8V SW
Q29 DTB123EK
Q30 DTC144EU
T8V SW
Q11 2SC4116
Q12 2SA1734
+8V REG
IC5 TA7808F
13.8V
C5V REG
IC9 TA78L05F
PROTECT
D20 DSA3A1
D24 RD20E
DATA BUS
TX
COMON
RX

SECTION 10 VOLTAGE DIAGRAM

• LOGIC UNIT

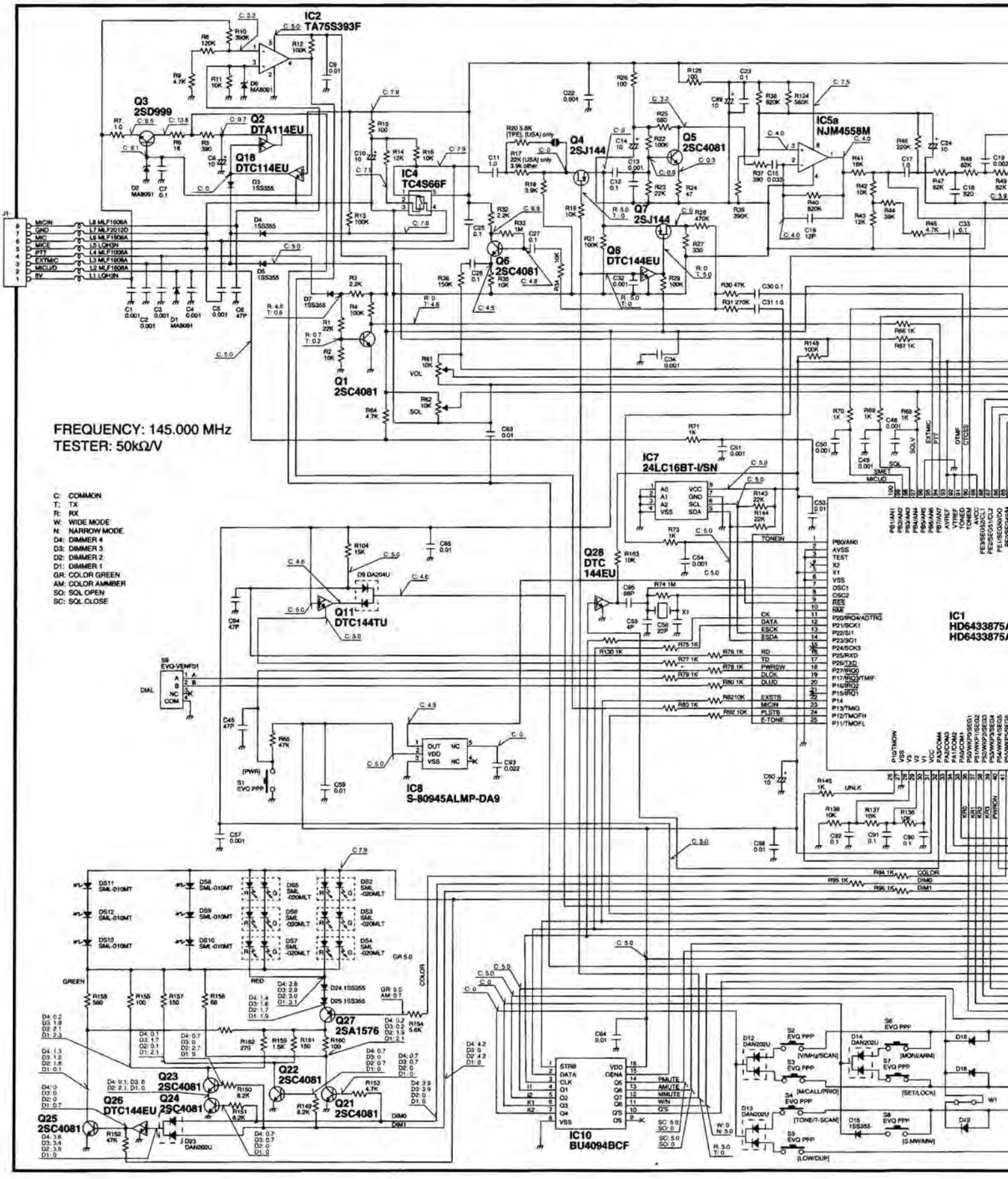

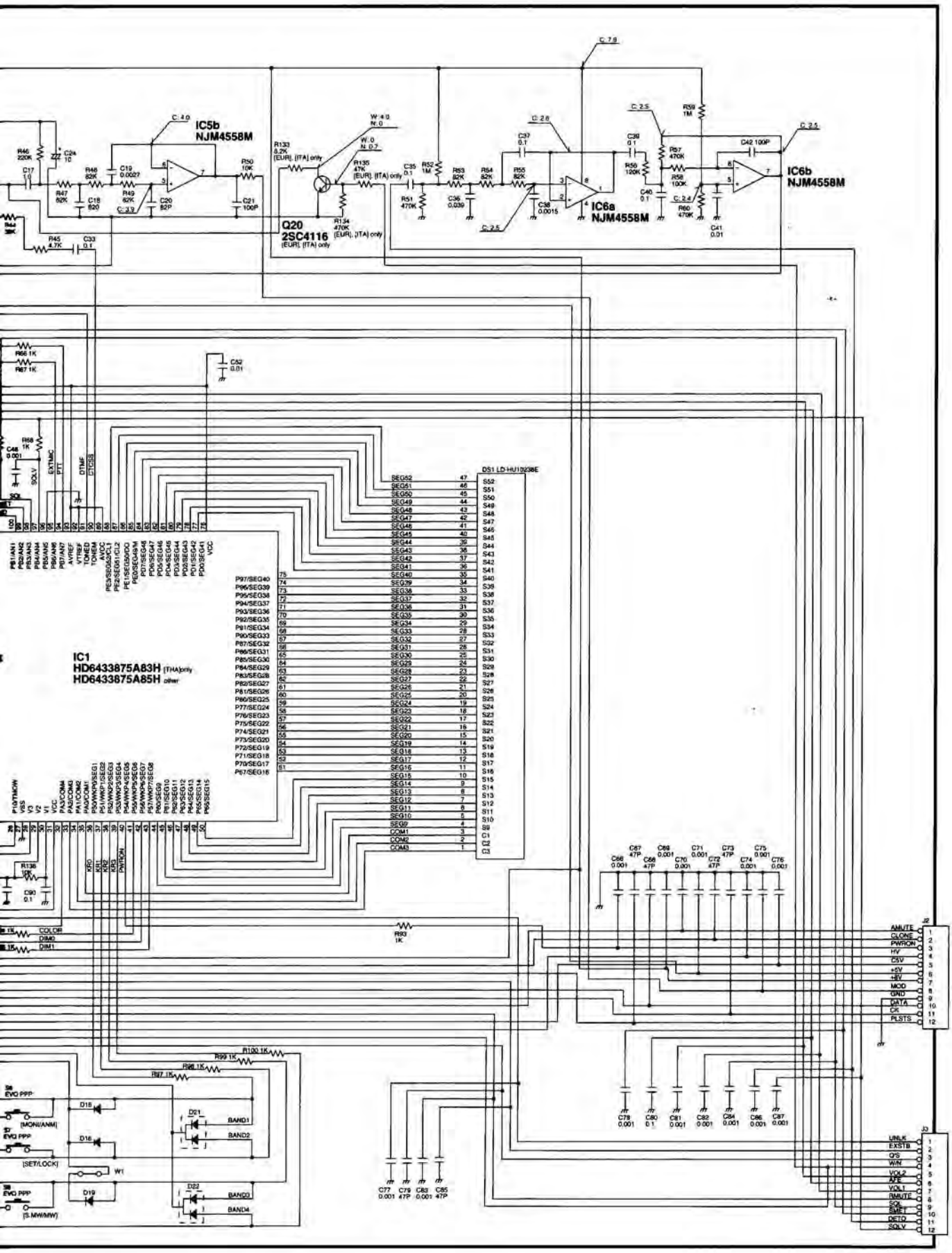
IC5b
NJM4558M
IC6a
NJM4558M
IC6b
NJM4558M
Q20
2SC4116
(EUR), (ITA) only
IC1
HD6433875A83H (THA)only
HD6433875A85H other
DS1 LD-HU10238E
J2
J3
AMUTE
CLONE
PWRON
HV
D5V
+5V
+8V
MOD
GND
DATA
CK
PLSTS
UNLK
EXSTB
QS
WN
VOL2
AFE
VOL1
RMUTE
SQL
SMET
DETO
SQLV
COLOR
DIM0
DIM1
BAND1
BAND2
BAND3
BAND4
[MONI/ANM]
[SET/LOCK]
[S.MW/MW]
EVO PPP

• MAIN UNIT

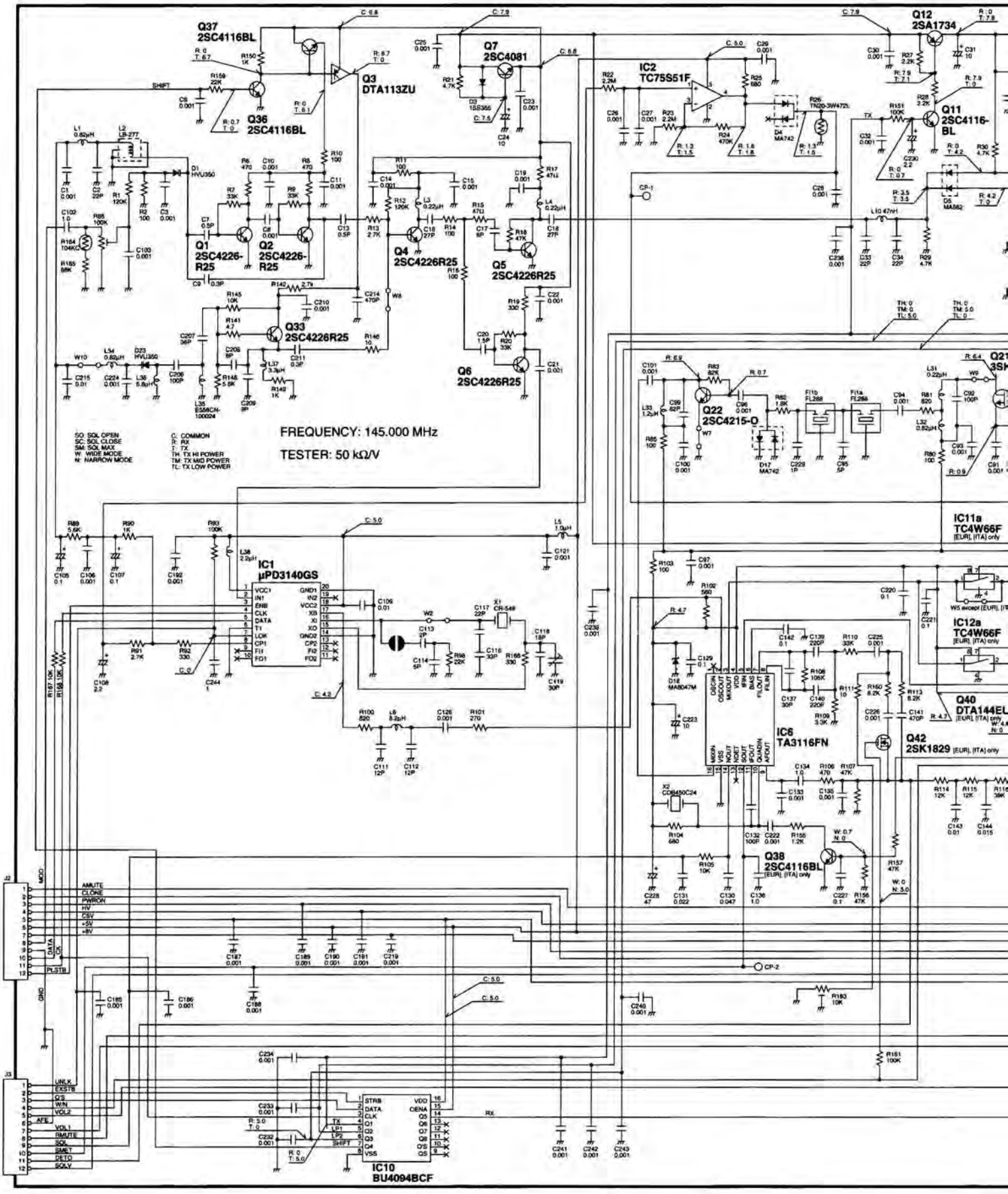
Q37
2SC4116BL
Q36
2SC4116BL
Q3
DTA113ZU
Q7
2SC4081
IC2
TC75S51F
Q12
2SA1734
Q11
2SC4116-BL
Q1
2SC4226-R25
Q2
2SC4226-R25
Q4
2SC4226R25
Q5
2SC4226R25
Q33
2SC4226R25
Q6
2SC4226R25
Q22
2SC4215-O
IC11a
TC4W66F
IC12a
TC4W66F
Q40
DTA144EL
Q42
2SK1829
IC1
μPD3140GS
IC6
TA3116FN
Q38
2SC4116BL
IC10
BU4094BCF
FREQUENCY: 145.000 MHz
TESTER: 50 kΩ/V
SQ: SQL OPEN
SC: SQL CLOSE
SM: SQL MAX
W: WIDE MODE
N: NARROW MODE
C: COMMON
R: RX
T: TX
TH: TX HI POWER
TM: TX MID POWER
TL: TX LOW POWER
AMUTE
CLONE
PWRON
HV
C5V
+5V
+8V
PLSTB
UNLK
EXSTB
QS
WN
VOL2
VOL1
RMUTE
SQL
SMET
DETO
SQLV
TX
RX
SHIFT

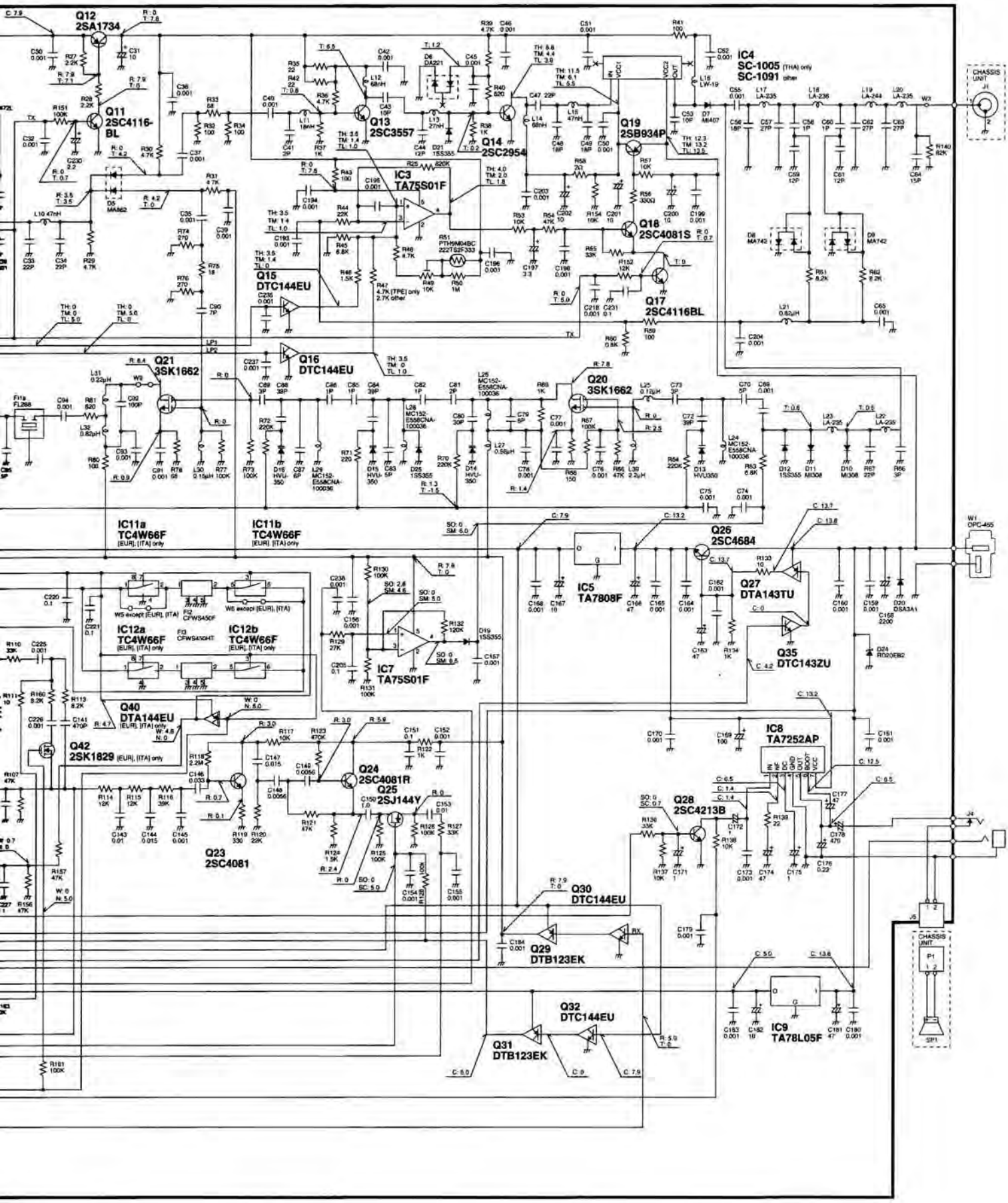
Q12
2SA1734
Q11
2SC4116-BL
Q13
2SC3557
Q14
2SC2954
IC3
TA75S01F
Q15
DTC144EU
Q16
DTC144EU
Q19
2SB934P
Q18
2SC4081S
Q17
2SC4116BL
IC4
SC-1005 (THA) only
SC-1091 other
CHASSIS UNIT
Q21
3SK1662
Q20
3SK1662
IC11a
TC4W66F
[EUR], [ITA] only
IC11b
TC4W66F
[EUR], [ITA] only
Q26
2SC4684
IC5
TA7808F
Q27
DTA143TU
Q35
DTC143ZU
IC12a
TC4W66F
[EUR], [ITA] only
IC12b
TC4W66F
[EUR], [ITA] only
IC7
TA75S01F
Q40
DTA144EU
[EUR], [ITA] only
Q42
2SK1829 [EUR], [ITA] only
Q24
2SC4081R
Q25
2SJ144Y
Q23
2SC4081
IC8
TA7252AP
Q28
2SC4213B
Q30
DTC144EU
Q29
DTB123EK
Q32
DTC144EU
Q31
DTB123EK
IC9
TA78L05F
W1
OPC-495
J1
J4
J5
P1
SP1

Icom Inc.

6-9-16, Kamihigashi, Hirano-ku, Osaka 547-0002, Japan
Phone : 06 793 5302
Fax : 06 793 0013

Icom America Inc.

<Corporate Headquarters>
2380 116th Avenue N.E., Bellevue, WA 98004, U.S.A.
Phone : (425) 454-8155 Fax : (425) 454-1509
URL : http://www.icomamerica.com

<Customer Service>
Phone : (425) 454-7619

Icom Canada

A Division of Icom America Inc.
3071 #5 Road, Unit 9, Richmond, B.C., V6X 2T4, Canada
Phone : (604) 273-7400 Fax : (604) 273-1900

Icom (Australia) Pty. Ltd.

A.C.N. 006 092 575
290-294 Albert Street, Brunswick, Victoria, 3056, Australia
Phone : 03 9387 0666 Fax : 03 9387 0022

Asia Icom Inc.

6F No. 68, Sec. 1 Cheng-Teh Road, Taipei, Taiwan R.O.C.

Icom (Europe) GmbH

Communication Equipment
Himmelgeister Str. 100, D-40225 Düsseldorf, Germany
Phone : 0211 346047 Fax : 0211 333639
URL : http://www.icomeurope.com

Icom Telecomunicaciones s.l.

"Edificio Can Castanyer" Crta. Gracia a Manresa km. 14,750
08190 Sant Cugat Del Valles Barcelona, SPAIN
Phone : (3) 589 46 82 Fax : (3) 589 04 46
E-mail : icom@lleida.com

Icom (UK) Ltd.

Unit 9, Sea St., Herne Bay, Kent, CT6 8LD, U.K.
Phone : 01227 741741 Fax : 01227 741742
URL : http://www.icomuk.co.uk

Icom France S.a

Zac de la Plaine, Rue Brindejonc des Moulinais
BP 5804, 31505 Toulouse Cedex, France
Phone : 561 36 03 03 Fax : 561 36 03 00
URL : http://www.icom-france.com

Count on us!

Icom Inc.
6-9-16, Kamihigashi, Hirano-ku, Osaka, 547-0002, Japan

A-5492I-S
Printed in Japan
© 1998 by Icom Inc.